MedDream UAB
K. Petrausko St. 26
LT-51423, Kaunas, Lithuania
info@meddream.com
www.meddream.com

MedDream version 8.9.1

DICOM Conformance Statement

(MedDream video viewing and converting functionalities v4.7.2)

Document version 1.0
Date: 2026 10 01

1 Conformance Statement Overview

VideoStation is an image acquisition modality. Its DICOM functionality allows to query the modality worklist and archive images. It supports the following network services:

Table 1. Network Services

Networking SOP Classes	User of Service (SCU)	Provider of Service (SCP)
Transfer		
Computed Radiography Image Storage	No	Yes
Digital X-Ray Image Storage - For Presentation	No	Yes
Digital X-Ray Image Storage - For Processing	No	Yes
Digital Mammography X-Ray Image Storage - For Presentation	No	Yes
Digital Mammography X-Ray Image Storage - For Processing	No	Yes
Digital Intra-Oral X-Ray Image Storage - For Presentation	No	Yes
Digital Intra-Oral X-Ray Image Storage - For Processing	No	Yes
CT Image Storage	No	Yes
Enhanced CT Image Storage	No	Yes
Legacy Converted Enhanced CT Image Storage	No	Yes
Ultrasound Multi-frame Image Storage (Retired)	No	Yes
Ultrasound Multi-frame Image Storage	No	Yes
MR Image Storage	No	Yes
Enhanced MR Image Storage	No	Yes
MR Spectroscopy Storage	No	Yes
Enhanced MR Color Image Storage	No	Yes
Legacy Converted Enhanced MR Image Storage	No	Yes
Nuclear Medicine Image Storage (Retired)	No	Yes
Ultrasound Image Storage (Retired)	No	Yes
Ultrasound Image Storage	No	Yes
Enhanced US Volume Storage	No	Yes
Secondary Capture Image Storage	Yes	Yes
Multi-frame Single Bit Secondary Capture Image Storage	No	Yes
Multi-frame Grayscale Byte Secondary Capture Image Storage	No	Yes
Multi-frame Grayscale Word Secondary Capture Image Storage	No	Yes
Multi-frame True Color Secondary Capture Image Storage	No	Yes
Standalone Overlay Storage (Retired)	No	Yes

Standalone Curve Storage (Retired)	No	Yes
Waveform Storage - Trial (Retired)	No	Yes
12-lead ECG Waveform Storage	No	Yes
General ECG Waveform Storage	No	Yes
Ambulatory ECG Waveform Storage	No	Yes
Hemodynamic Waveform Storage	No	Yes
Cardiac Electrophysiology Waveform Storage	No	Yes
Basic Voice Audio Waveform Storage	No	Yes
General Audio Waveform Storage	No	Yes
Arterial Pulse Waveform Storage	No	Yes
Respiratory Waveform Storage	No	Yes
Multi-channel Respiratory Waveform Storage	No	Yes
Routine Scalp Electroencephalogram Waveform Storage	No	Yes
Electromyogram Waveform Storage	No	Yes
Electrooculogram Waveform Storage	No	Yes
Sleep Electroencephalogram Waveform Storage	No	Yes
Body Position Waveform Storage	No	Yes
Standalone Modality LUT Storage (Retired)	No	Yes
Standalone VOI LUT Storage (Retired)	No	Yes
Grayscale Softcopy Presentation State Storage	No	Yes
Color Softcopy Presentation State Storage	No	Yes
Pseudo-Color Softcopy Presentation State Storage	No	Yes
Blending Softcopy Presentation State Storage	No	Yes
XA/XRF Grayscale Softcopy Presentation State Storage	No	Yes
Grayscale Planar MPR Volumetric Presentation State Storage	No	Yes
Compositing Planar MPR Volumetric Presentation State Storage	No	Yes
Advanced Blending Presentation State Storage	No	Yes
Volume Rendering Volumetric Presentation State Storage	No	Yes
Segmented Volume Rendering Volumetric Presentation State Storage	No	Yes
Multiple Volume Rendering Volumetric Presentation State Storage	No	Yes
X-Ray Angiographic Image Storage	No	Yes
Enhanced XA Image Storage	No	Yes
X-Ray Radiofluoroscopic Image Storage	No	Yes
Enhanced XRF Image Storage	No	Yes
X-Ray Angiographic Bi-Plane Image Storage (Retired)	No	Yes

X-Ray 3D Angiographic Image Storage1.2.840.10008.5.1.4.1.1.13.1.1X-Ray 3D Craniofacial Image Storage	No	Yes
Breast Tomosynthesis Image Storage	No	Yes
Breast Projection X-Ray Image Storage - For Presentation	No	Yes
Breast Projection X-Ray Image Storage - For Processing	No	Yes
Intravascular Optical Coherence Tomography Image Storage - For Presentation	No	Yes
Intravascular Optical Coherence Tomography Image Storage - For Processing	No	Yes
Nuclear Medicine Image Storage	No	Yes
Parametric Map Storage	No	Yes
MR Image Storage Zero Padded (Retired)	No	Yes
Raw Data Storage	No	Yes
Spatial Registration Storage	No	Yes
Spatial Fiducials Storage	No	Yes
Deformable Spatial Registration Storage	No	Yes
Segmentation Storage	No	Yes
Surface Segmentation Storage	No	Yes
Tractography Results Storage	No	Yes
Real World Value Mapping Storage	No	Yes
Surface Scan Mesh Storage	No	Yes
Surface Scan Point Cloud Storage	No	Yes
VL Image Storage - Trial (Retired)	No	Yes
VL Multi-frame Image Storage - Trial (Retired)	No	Yes
VL Endoscopic Image Storage	No	Yes
Video Endoscopic Image Storage	No	Yes
VL Microscopic Image Storage	No	Yes
Video Microscopic Image Storage	No	Yes
VL Slide-Coordinates Microscopic Image Storage	No	Yes
VL Photographic Image Storage	No	Yes
Video Photographic Image Storage	No	Yes
Ophthalmic Photography 8 Bit Image Storage	No	Yes
Ophthalmic Photography 16 Bit Image Storage	No	Yes
Stereometric Relationship Storage	No	Yes
Ophthalmic Tomography Image Storage	No	Yes
Wide Field Ophthalmic Photography Stereographic Projection Image Storage	No	Yes
Wide Field Ophthalmic Photography 3D Coordinates Image Storage	No	Yes

Ophthalmic Optical Coherence Tomography En Face Image Storage	No	Yes
Ophthalmic Optical Coherence Tomography B-scan Volume Analysis Storage	No	Yes
VL Whole Slide Microscopy Image Storage	No	Yes
Dermoscopic Photography Image Storage	No	Yes
Lensometry Measurements Storage	No	Yes
Autorefraction Measurements Storage	No	Yes
Keratometry Measurements Storage	No	Yes
Subjective Refraction Measurements Storage	No	Yes
Visual Acuity Measurements Storage	No	Yes
Spectacle Prescription Report Storage	No	Yes
Ophthalmic Axial Measurements Storage	No	Yes
Intraocular Lens Calculations Storage	No	Yes
Macular Grid Thickness and Volume Report Storage	No	Yes
Ophthalmic Visual Field Static Perimetry Measurements Storage	No	Yes
Ophthalmic Thickness Map Storage	No	Yes
Corneal Topography Map Storage	No	Yes
Text SR Storage - Trial (Retired)	No	Yes
Audio SR Storage - Trial (Retired)	No	Yes
Detail SR Storage - Trial (Retired)	No	Yes
Comprehensive SR Storage - Trial (Retired)	No	Yes
Basic Text SR Storage	No	Yes
Enhanced SR Storage	No	Yes
Comprehensive SR Storage	No	Yes
Comprehensive 3D SR Storage	No	Yes
Extensible SR Storage	No	Yes
Procedure Log Storage	No	Yes
Mammography CAD SR Storage	No	Yes
Key Object Selection Document Storage	No	Yes
Chest CAD SR Storage	No	Yes
X-Ray Radiation Dose SR Storage	No	Yes
Radiopharmaceutical Radiation Dose SR Storage	No	Yes
Colon CAD SR Storage	No	Yes
Implantation Plan SR Storage	No	Yes
Acquisition Context SR Storage	No	Yes
Simplified Adult Echo SR Storage	No	Yes

Patient Radiation Dose SR Storage	No	Yes
Planned Imaging Agent Administration SR Storage	No	Yes
Performed Imaging Agent Administration SR Storage	No	Yes
Content Assessment Results Storage	No	Yes
Encapsulated PDF Storage	No	Yes
Encapsulated CDA Storage	No	Yes
Encapsulated STL Storage	No	Yes
Encapsulated OBJ Storage	No	Yes
Encapsulated MTL Storage	No	Yes
Positron Emission Tomography Image Storage	No	Yes
Legacy Converted Enhanced PET Image Storage	No	Yes
Standalone PET Curve Storage (Retired)	No	Yes
Enhanced PET Image Storage	No	Yes
Basic Structured Display Storage	No	Yes
CT Defined Procedure Protocol Storage	No	Yes
CT Performed Procedure Protocol Storage	No	Yes
RT Image Storage	No	Yes
RT Dose Storage	No	Yes
RT Structure Set Storage	No	Yes
RT Beams Treatment Record Storage	No	Yes
RT Plan Storage	No	Yes
RT Brachy Treatment Record Storage	No	Yes
RT Treatment Summary Record Storage	No	Yes
RT Ion Plan Storage	No	Yes
RT Ion Beams Treatment Record Storage	No	Yes
RT Physician Intent Storage	No	Yes
RT Segment Annotation Storage	No	Yes
RT Radiation Set Storage	No	Yes
C-Arm Photon-Electron Radiation Storage	No	Yes
Tomotherapeutic Radiation Storage	No	Yes
Robotic-Arm Radiation Storage	No	Yes
RT Radiation Record Set Storage	No	Yes
RT Radiation Salvage Record Storage	No	Yes
Tomotherapeutic Radiation Record Storage	No	Yes
C-Arm Photon-Electron Radiation Record Storage	No	Yes

Robotic Radiation Record Storage	No	Yes
DICOS CT Image Storage	No	Yes
DICOS Digital X-Ray Image Storage - For Presentation	No	Yes
DICOS Digital X-Ray Image Storage - For Processing	No	Yes
DICOS Threat Detection Report Storage	No	Yes
DICOS 2D AIT Storage	No	Yes
DICOS 3D AIT Storage	No	Yes
DICOS Quadrupole Resonance (QR) Storage	No	Yes
Eddy Current Image Storage	No	Yes
Eddy Current Multi-frame Image Storage	No	Yes
RT Beams Delivery Instruction Storage - Trial (Retired)	No	Yes
RT Conventional Machine Verification - Trial (Retired)	No	Yes
RT Ion Machine Verification - Trial (Retired)	No	Yes
RT Beams Delivery Instruction Storage	No	Yes
RT Brachy Application Setup Delivery Instruction Storage	No	Yes
Hanging Protocol Storage	No	Yes
Color Palette Storage	No	Yes
Generic Implant Template Storage	No	Yes
Implant Assembly Template Storage	No	Yes
Implant Template Group Storage	No	Yes
Private TomTec Annotation Storage	No	Yes
Private Toshiba US Image Storage	No	Yes
Private Fuji CR Image Storage	No	Yes
Private GE Collage Storage	No	Yes
Private ERAD Practice Builder Report Text Storage	No	Yes
Private ERAD Practice Builder Report Dictation Storage	No	Yes
Private Philips HP Live 3D 01 Storage	No	Yes
Private Philips HP Live 3D 02 Storage	No	Yes
Private GE 3D Model Storage	No	Yes
Private GE PET Raw Data Storage	No	Yes
Private GE RT Plan Storage	No	Yes
Private PixelMed Legacy Converted Enhanced CT Image Storage	No	Yes
Private PixelMed Legacy Converted Enhanced MR Image Storage	No	Yes
Private PixelMed Legacy Converted Enhanced PET Image Storage	No	Yes
Private PixelMed Floating Point Image Storage	No	Yes

Private Siemens CSA Non Image Storage	No	Yes
Private Siemens CT MR Volume Storage	No	Yes
Private Siemens AX Frame Sets Storage	No	Yes
Private Philips Specialised XA Storage	No	Yes
Private Philips CX Image Storage	No	Yes
Private Philips 3D Presentation State Storage	No	Yes
Private Philips VRML Storage	No	Yes
Private Philips Volume Set Storage	No	Yes
Private Philips Volume Storage (Retired)	No	Yes
Private Philips Volume Storage	No	Yes
Private Philips 3D Object Storage (Retired)	No	Yes
Private Philips 3D Object Storage	No	Yes
Private Philips Surface Storage (Retired)	No	Yes
Private Philips Surface Storage	No	Yes
Private Philips Composite Object Storage	No	Yes
Private Philips MR Cardio Profile Storage	No	Yes
Private Philips MR Cardio Storage (Retired)	No	Yes
Private Philips MR Cardio Storage	No	Yes
Private Philips CT Synthetic Image Storage	No	Yes
Private Philips MR Synthetic Image Storage	No	Yes
Private Philips MR Cardio Analysis Storage (Retired)	No	Yes
Private Philips MR Cardio Analysis Storage	No	Yes
Private Philips CX Synthetic Image Storage	No	Yes
Private Philips Perfusion Storage	No	Yes
Private Philips Perfusion Image Storage	No	Yes
Private Philips X-Ray MF Storage	No	Yes
Private Philips Live Run Storage	No	Yes
Private Philips Run Storage	No	Yes
Private Philips Reconstruction Storage	No	Yes
Private Philips MR Spectrum Storage	No	Yes
Private Philips MR Series Data Storage	No	Yes
Private Philips MR Color Image Storage	No	Yes
Private Philips MR Examcard Storage	No	Yes
Private PMOD Multi-frame Image Storage	No	Yes
Workflow Management		

Modality Worklist Information Model – FIND	Yes	No
Connectivity Verification		
Verification	Yes	Yes

The verification function is accessible from application settings where Remote Application Entities are defined. The remaining DICOM functionality is integrated into the usual workflow.
VideoStation does not support Media Interchange.

2 Table of Contents

1 Conformance Statement Overview 2
2 Table of Contents 10
3 Introduction 12
3.1 Revision History 12
3.2 Audience 12
3.3 Remarks 13
3.4 Definitions and Terms 13
3.5 Abbreviations 14
3.6 References 15
4 Networking 16
4.1 Implementation Model 16
4.1.1 Implementation Data Flow 16
4.1.2 Functional Definition of AEs 16
4.1.2.1 Functional Definition of Verification Client Application Entity 16
4.1.2.2 Functional Definition of Storage Client Application Entity 17
4.1.2.3 Functional Definition of Modality Worklist Client Application Entity 17
4.1.2.4 Functional Definition of Storage Server Application Entity 17
4.1.3 Sequencing of Real–World Activities 17
4.2 AE Specifications 20
4.2.1 Verification Client AE Specification 20
4.2.1.1 SOP Classes 20
4.2.1.2 Associations Policies 20
4.2.1.2.1 General 20
4.2.1.2.2 Number of Associations 20
4.2.1.2.3 Asynchronous Nature 20
4.2.1.2.4 Implementation Identifying Information 20
4.2.1.3 Association Initiation Policy 21
4.2.1.3.1 Activity – Verify DICOM Communication 21
4.2.1.3.1.1 Description and Sequencing of Activity 21
4.2.1.3.1.2 Proposed Presentation Contexts 21
4.2.1.3.1.3 SOP Specific Conformance for Verification SOP Class 21
4.2.2 Storage Client Application Entity Specification 21
4.2.2.1 SOP Classes 21
4.2.2.2 Associations Policies 21
4.2.2.2.1 General 21
4.2.2.2.2 Number of Associations 21
4.2.2.2.3 Asynchronous Nature 22
4.2.2.2.4 Implementation Identifying Information 22
4.2.2.3 Association Initiation Policy 22
4.2.2.3.1 Activity – Send DICOM Instances 22
4.2.2.3.1.1 Description and Sequencing of Activity 22
4.2.2.3.1.2 Proposed Presentation Contexts 23
4.2.2.3.1.3 SOP Specific Conformance for Storage SOP Classes 24
4.2.3 Modality Worklist Client Application Entity Specification 24
4.2.3.1 SOP Classes 24
4.2.3.2 Associations Policies 24
4.2.3.2.1 General 24
4.2.3.2.2 Number of Associations 25

4.2.3.2.3 Asynchronous Nature 25
4.2.3.2.4 Implementation Identifying Information....25
4.2.3.3 Association Initiation Policy 25
4.2.3.3.1 Activity – Query Modality Worklist....25
4.2.3.3.1.1 Description and Sequencing of Activity 25
4.2.3.3.2.2 Proposed Presentation Contexts....26
4.2.3.3.2.3 SOP Specific Conformance for Modality Worklist SOP Class....26
4.2.4 Storage Server Application Entity Specification 29
4.2.4.1 SOP Classes 29
4.2.4.2 Associations Policies....37
4.2.4.2.1 General 37
4.2.4.2.2 Number of Associations 38
4.2.4.2.3 Asynchronous Nature 38
4.2.4.2.4 Implementation Identifying Information....38
4.2.4.3 Association Initiation Policy 38
4.2.2.3.1 Activity – Receive DICOM Instances 38
4.2.4.3.1.1 Description and Sequencing of Activity 38
4.2.4.3.1.2 Accepted Presentation Contexts....38
4.2.4.3.1.3 SOP Specific Conformance for Storage SOP Classes....51
4.3 Network Interfaces 52
4.3.1 Physical Network Interface....52
4.3.2 Additional Protocols....52
4.3.3 IPv4 and IPv6 Support....52
4.4 Configuration 52
4.4.1 AE Title/Presentation Address Mapping 52
4.4.1.1 Local AE Titles 52
4.4.1.2 Remote AE Titles 53
4.4.2 Parameters 53
5 Media Interchange 54
6 Support of Extended Character Sets 55
7 Security 56
8 Annexes....57
8.1 IOD Contents 57
8.1.1 File Meta Information 57
8.1.2 Created SOP Instances 58
8.1.2.1 Secondary Capture IOD 58
8.1.3 Usage of Attributes from Received IODs 67
8.1.4 Attribute Mapping 67
8.1.5 Coerced/Modified Fields 68
8.2 Data Dictionary of Private Attributes 68
8.3 Coded Terminology and Templates....68
8.4 Greyscale Image Consistency 69
8.5 Standard Extended / Specialized/ Private SOP Classes....69
8.6 Private Transfer Syntaxes 69

3 Introduction

3.1 Revision History

Version	Date	Author	Changes
1.0	Oct 2011	Tomas Burba	Initial draft
2.0	Sep 2017	Tomas Burba	Added Storage Server AE, Secondary Capture Image IOD
3.0	Sep 2019	Kęstutis Freigofas	Update to version 4.00, IOD and MWL
4.0	April 2021	Kęstutis Freigofas	Update implementation information and configuration parameters
4.1	May 2021	Kęstutis Freigofas	Update implementation information and configuration parameters
4.2	May 2022	Kęstutis Freigofas	Update version
4.3	Aug 2022	Kęstutis Freigofas	Update version
4.4	Jan 2023	Kęstutis Freigofas	Update IOD
4.5	May 2023	Kęstutis Freigofas	Update IOD
4.6	Sep 2023	Kęstutis Freigofas	Update version
4.7	Oct. 2023	Kęstutis Freigofas	Update version
4.8	Dec 2023	Kęstutis Freigofas	Update version
4.9	Apr 2024	Kęstutis Freigofas	Update version
5.0	Aug 2024	Kęstutis Freigofas	Update version
5.1	Sept 2024	Kęstutis Freigofas	Update version, company name
5.2	Mar 2025	Kęstutis Freigofas	Update version
5.3	Jun 2025	Kęstutis Freigofas	Update version
5.4	Nov 2025	Kęstutis Freigofas	Update version
5.5	Dec 2025	Kęstutis Freigofas	Update version
5.6	Feb 2025	Kęstutis Freigofas	Update version
5.7	May 2026	Kęstutis Freigofas	Update version
5.8	Oct 2026	Kęstutis Freigofas	Update version

3.2 Audience

This document is intended for the following:
• Potential users
• System integrators of medical equipment
It is assumed that the reader is familiar with the DICOM standard.

3.3 Remarks

DICOM, by itself, does not guarantee interoperability. However, the Conformance Statement facilitates a first level validation for interoperability between different applications supporting the same DICOM functionality.
This Conformance Statement is not intended to replace validation with other DICOM equipment to ensure proper exchange of information intended.
The scope of this Conformance Statement is to facilitate communication with other vendors' medical equipment. The Conformance Statement should be read and understood in conjunction with the DICOM Standard. However, by itself it is not guaranteed to ensure the desired interoperability and successful interconnectivity with existing DICOM systems.
The user should be aware of the following important issues:
• Test procedures should be defined to validate the desired level of connectivity.
• The DICOM standard will evolve to meet the users' future requirements.

3.4 Definitions and Terms

Informal definitions are provided for the following terms used in this Conformance Statement. The DICOM Standard is the authoritative source for formal definitions of these terms.

Abstract Syntax
the information agreed to be exchanged between applications, generally equivalent to a Service/Object Pair (SOP) Class.
Examples: Verification SOP Class, Modality Worklist Information Model Find SOP Class, Secondary Capture Image Storage SOP Class.

Application Entity (AE)
an end point of a DICOM information exchange, including the DICOM network or media interface software; i.e., the software that sends or receives DICOM information objects or messages.

Application Entity Title
the externally known name of an Application Entity, used to identify a DICOM application to other DICOM applications on the network.

Application Context
the specification of the type of communication used between Application Entities.
Example: DICOM network protocol.

Association
a network communication channel set up between Application Entities.

Attribute
a unit of information in an object definition; a data element identified by a tag. The information may be a complex data structure (Sequence), itself composed of lower level data elements.
Examples: Patient ID (0010,0020), Accession Number (0008,0050), Photometric Interpretation (0028,0004), Procedure Code Sequence (0008,1032).

Information Object Definition (IOD)
the specified set of Attributes that comprise a type of data object; does not represent a specific instance of the data object, but rather a class of similar data objects that have the same properties. The Attributes may be specified as Mandatory (Type 1), Required but possibly unknown (Type 2), or Optional (Type 3), and there may be conditions associated with the use of an Attribute (Types 1C and 2C).
Examples: MR Image IOD, CT Image IOD, Print Job IOD.

Module
a set of Attributes within an Information Object Definition that are logically related to each other.
Example: Patient Module includes Patient Name, Patient ID, Patient Birth Date, and Patient Sex.

Negotiation

first phase of Association establishment that allows Application Entities to agree on the types of data to be exchanged and how that data will be encoded.

Presentation Context

the set of DICOM network services used over an Association, as negotiated between Application Entities; includes Abstract Syntaxes and Transfer Syntaxes.

Protocol Data Unit (PDU)

a packet (piece) of a DICOM message sent across the network. Devices must specify the maximum size packet they can receive for DICOM messages.

Query Key

A input value for a query process. Query Keys denote the set of DICOM tags that are sent from the SCU to SCP and thus control the query result.

Service Class Provider (SCP)

role of an Application Entity that provides a DICOM network service; typically, a server that performs operations requested by another Application Entity (Service Class User).

Examples: Picture Archiving and Communication System (image storage SCP, and image query/retrieve SCP), Radiology Information System (modality worklist SCP).

Service Class User (SCU)

role of an Application Entity that uses a DICOM network service; typically, a client.

Examples: imaging modality (image storage SCU, and modality worklist SCU), imaging workstation (image query/retrieve SCU)

Service/Object Pair (SOP) Class

the specification of the network or media transfer (service) of a particular type of data (object); the fundamental unit of DICOM interoperability specification.

Examples: Ultrasound Image Storage Service, Basic Grayscale Print Management.

Service/Object Pair (SOP) Instance

an information object; a specific occurrence of information exchanged in a SOP Class. Examples: a specific x-ray image.

Tag

a 32-bit identifier for a data element, represented as a pair of four-digit hexadecimal numbers, the “group” and the “element”. If the “group” number is odd, the tag is for a private (manufacturer-specific) data element.

Examples: (0010,0020) [Patient ID], (07FE,0010) [Pixel Data], (0019,0210) [private data element]

Transfer Syntax

the encoding used for exchange of DICOM information objects and messages.

Examples: JPEG compressed (images), little endian explicit value representation.

Unique Identifier (UID)

a globally unique “dotted decimal” string that identifies a specific object or a class of objects; an ISO-8824 Object Identifier.

Examples: Study Instance UID, SOP Class UID, SOP Instance UID.

Value Representation (VR)

the format type of an individual DICOM data element, such as text, an integer, a person’s name, or a code. DICOM information objects can be transmitted with either explicit identification of the type of each data element (Explicit VR), or without explicit identification (Implicit VR); with Implicit VR, the receiving application must use a DICOM data dictionary to look up the format of each data element.

3.5 Abbreviations

The following acronyms are used in this document.

- AE — Application Entity
- AET — Application Entity Title

- DICOM — Digital Imaging and Communication in Medicine
- DIMSE — DICOM Message Service Element
- ILE — Implicit VR Little Endian
- ISO — International Standards Organization
- LUT — Look-up Table
- MWL — Modality Worklist
- NEMA — National Electrical Manufacturers Association
- PDU — Protocol Data Unit
- SCP — Storage Class Provider
- SCU — Storage Class User
- SOP — Service Object Pair
- TCP/IP — Transmission Control Protocol/Internet Protocol
- TLS — Transport Layer Security
- UID — Unique Identifier
- VR — Value Representation

3.6 References

NEMA PS3 / ISO 12052, Digital Imaging and Communications in Medicine (DICOM) Standard, National Electrical Manufacturers Association, Rosslyn, VA, USA (available free at http://medical.nema.org/)

4 Networking

4.1 Implementation Model

VideoStation is a Windows application that captures still images and videos to converts them into DICOM Part 10 compliant files. The application can send these images to remote equipment using the DICOM protocol.
The application uses the DICOM Worklist Management service to populate information in generated DICOM datasets.
It is logically divided into 4 different DICOM Application Entities: Verification Client, Storage Client, Storage Server and Modality Worklist Client. However, all AEs share the same Title.
These Clients are basically modified third–party libraries build-in VideoStation main JAVA application.

4.1.1 Implementation Data Flow

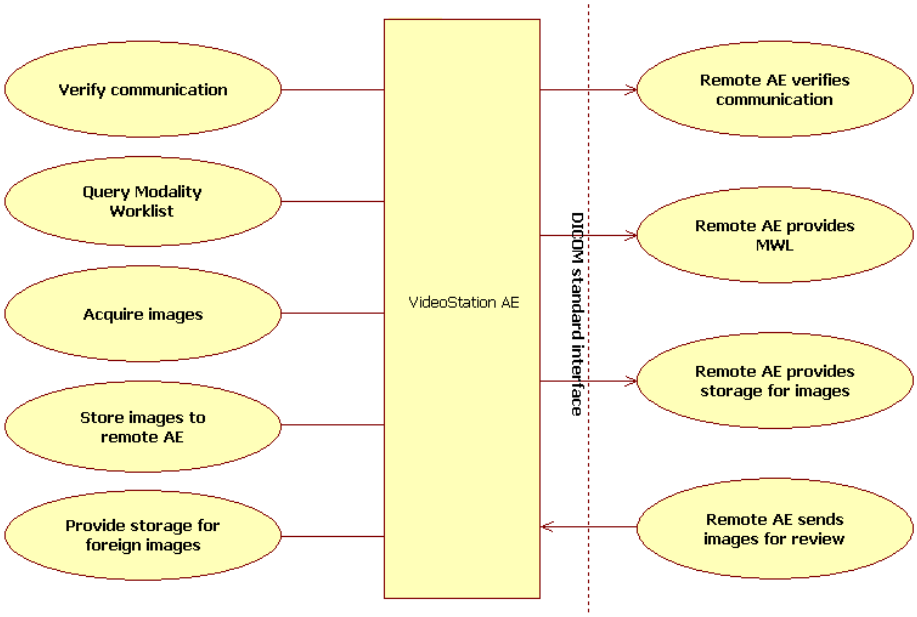

Figure 1. VideoStation Data Flow Diagram

4.1.2 Functional Definition of AEs

4.1.2.1 Functional Definition of Verification Client Application Entity

The Verification Client Application Entity is a Verification SCU. It connects to the presentation address given as the Called Application Entity Title and establishes an Association with Presentation Context of the Verification Service Class. A message is then shown to the operator detailing whether the association was established successfully or not.

4.1.2.2 Functional Definition of Storage Client Application Entity

The Storage Client Application Entity is a Storage SCU. It connects to the presentation address given as the Called Application Entity Title and establishes an Association with Presentation Context of the Storage Service Class. Then it sends any supported DICOM Instances specified by the operator, over a Storage Request.

4.1.2.3 Functional Definition of Modality Worklist Client Application Entity

The Modality Worklist Client Application Entity connects at the presentation address given as a Called Application Entity Title. It will propose Associations with Presentation Context for SOP Class of the Modality Worklist Service Class.
When a WORKLIST–FIND request is sent, Modality Worklist Client AE will wait on the same Association for a C–FIND response and then release the Association. The operator is provided with a set of worklist items matching the query request.

4.1.2.4 Functional Definition of Storage Server Application Entity

The Storage Server Application Entity is a Storage SCP. It listens at the configured presentation address and accepts an Association with Presentation Contexts of the Storage Service Class and Verification Service Class. Then it receives any supported DICOM Instances over a Storage Request. It will also reply to Verification messages, thereby indicating its availability to Remote AEs.

4.1.3 Sequencing of Real–World Activities

See Fig. 2 on the next page for illustration.

Upload earlier studies of this patient

The operator, at his own choice, may send related studies to VideoStation in advance so that they can be viewed as a reference before the acquisition. This is performed by external means, for example, using a corresponding function of the Remote Storage Server AE.

Enter patient data
Before acquisition the operator can skip fill/selecting patient's data and start acquire images/videos. It will generate patient data which can be changed in a process. Finally, operator must update patient data by selecting one of the options:

- Manually fill small form with basic patient data in VideoStation PATIENT dialog.
- Fill Modality worklist search form (search criteria of patient, procedure attributes and accession number) in VideoStation WORKLIST dialog. Can review founded result attributes. Changing current working study patient data manually or selecting patient from LOCAL – worklist data will be removed and study UID will be regenerated.
- Fill search form in VideoStation LOCAL dialog. This enables to select patient from studies created or received by VideoStation earlier.

These options can be as a starting point before acquire images/videos. Open one of the required dialogs and fill or select result containing patient data.

Acquire images/videos

VideoStation can start acquire image/video in CURRENT STUDY dialog.
It offers the "Snapshot" button that captures a single frame from video data into a JPEG file. Another choice is the "Record" button that begins recording video data to a MPEG-2/MPEG-4 file, and its complement, the "Stop" button.
Any number of still images and videos can be added to the study, in any order. It is possible to find this study using LOCAL or WORKLIST (started, but not converted to DICOM format) search function, open it and add/remove more images or add/remove/modify videos.
At this point the data is still on VideoStation only and not in DICOM format.

Store images permanently

The operator decides that the study contains enough material and accesses the "Save" function. All images and videos are converted to the DICOM format in the background. After that, all converted studies are sent to the remote storage if one is configured. The operator can also repeatedly send a saved study any time by using the "Forward" function.
Non–converted and converted studies are marked accordingly among VideoStation local search results.

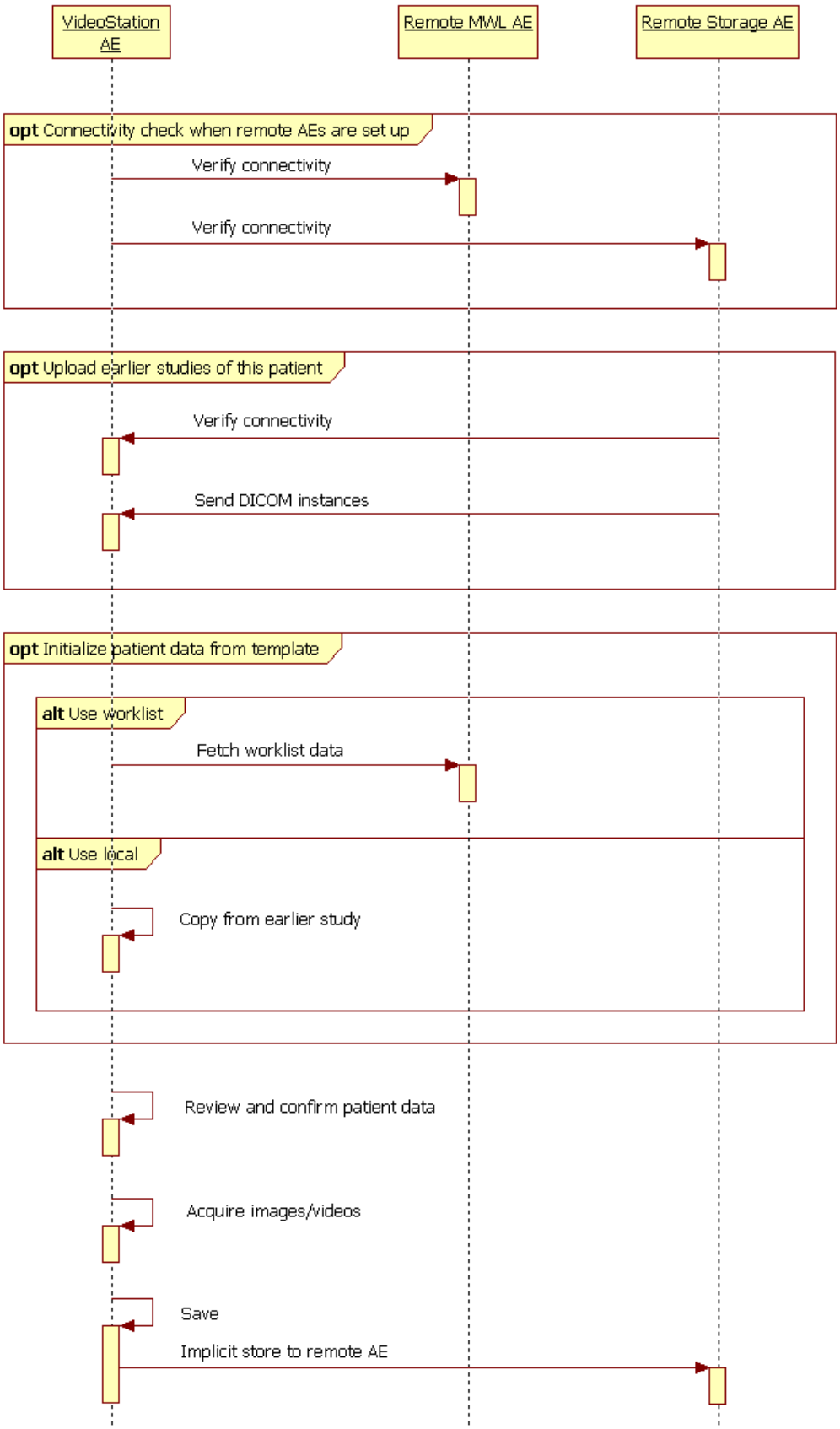
VideoStation AE
Remote MWL AE
Remote Storage AE
opt Connectivity check when remote AEs are set up
Verify connectivity
Verify connectivity
opt Upload earlier studies of this patient
Verify connectivity
Send DICOM instances
opt Initialize patient data from template
alt Use worklist
Fetch worklist data
alt Use local
Copy from earlier study
Review and confirm patient data
Acquire images/videos
Save
Implicit store to remote AE

Figure 2. A typical diagnostic case

4.2 AE Specifications

4.2.1 Verification Client AE Specification

4.2.1.1 SOP Classes

VideoStation Verification Client Application Entity provides Standard Conformance to the following SOP Classes:

Table 2. SOP Classes for Verification Client AE

SOP Class Name	SOP Class UID	SCU	SCP
Verification SOP Class	1.2.840.10008.1.1	Yes	No

4.2.1.2 Associations Policies

4.2.1.2.1 General

The Verification Client AE will propose Association Requests for the Verification Service.
The Verification Client AE itself does not accept Associations.
The DICOM standard application context name for DICOM 3.0 is always accepted and proposed:

Table 3. DICOM application context name for Verification Client AE

Application Context Name	1.2.840.10008.3.1.1.1

4.2.1.2.2 Number of Associations

Only a single Association is active at the moment. This is a direct result of the operator pressing a button dedicated to a particular Remote AE.

4.2.1.2.3 Asynchronous Nature

The Verification Client does not support asynchronous communication (multiple outstanding transactions over a single Association).

4.2.1.2.4 Implementation Identifying Information

The implementation information for this Application Entity is:

Table 4. DICOM Implementation Class and Version for Verification Client AE

Implementation Class UID	1.3.6.1.4.1.44316.4
Implementation Version Name	MDSTATION

4.2.1.3 Association Initiation Policy

4.2.1.3.1 Activity – Verify DICOM Communication

4.2.1.3.1.1 Description and Sequencing of Activity

This activity is available as part of the configuration process. When the user has entered Title, IP and Port of a particular Remote AE (either a Modality Worklist Server or Storage Server), can press a nearby "Echo" button to immediately verify accessibility of that single AE.
Only the Verification SOP class is proposed. After the Remote AE accepts the association, a C–ECHO message is exchanged. A message will appear stating results of the check.

4.2.1.3.1.2 Proposed Presentation Contexts

Table 5. Accepted Presentation Contexts for Verification Client AE

Abstract Syntax		Transfer Syntax		Role	Ext. Neg.
Name	**UID**	**Name List**	**UID List**		
Verification SOP Class	1.2.840.10008.1.1	Implicit VR Little Endian	1.2.840.10008.1.2	SCU	None

4.2.1.3.1.3 SOP Specific Conformance for Verification SOP Class

VideoStation Verification Client provides standard conformance to the DICOM Verification Service Class as a SCU.

4.2.2 Storage Client Application Entity Specification

4.2.2.1 SOP Classes

VideoStation Storage Client Application Entity provides Standard Conformance to the following SOP Classes:

Table 6. SOP Classes for Storage Client AE

SOP Class Name	SOP Class UID	SCU	SCP
Secondary Capture Image Storage	1.2.840.10008.5.1.4.1.1.7	Yes	No

4.2.2.2 Associations Policies

4.2.2.2.1 General

The Storage Client AE proposes Association Requests for the Storage Service.
The Storage Client AE itself does not accept Associations.
The DICOM standard application context name for DICOM 3.0 is always accepted and proposed:

Table 7. DICOM application context name for Storage Client AE

Application Context Name	1.2.840.10008.3.1.1.1

4.2.2.2.2 Number of Associations

Only a single Association is active at the moment. DICOM instances are sent one at a time.

4.2.2.2.3 Asynchronous Nature

The Storage Client does not support asynchronous communication (multiple outstanding transactions over a single Association).

4.2.2.2.4 Implementation Identifying Information

The implementation information for this Application Entity is:

Table 8. DICOM Implementation Class and Version for Storage Client AE

Implementation Class UID	1.3.6.1.4.1.44316.4
Implementation Version Name	MDSTATION

4.2.2.3 Association Initiation Policy

4.2.2.3.1 Activity – Send DICOM Instances

4.2.2.3.1.1 Description and Sequencing of Activity

See Fig. 3 on next page for illustration.

This activity is triggered in the background as part of the permanent conversion of acquired images/videos to the DICOM format.

There will be no attempt to send the created DICOM instances if the Remote Storage AE Title is not configured in application settings.

VideoStation always sends as many items as possible and the failure for every instance is indicated during process.
Operator can manual retry send via the local search, then perform the "Forward" function.

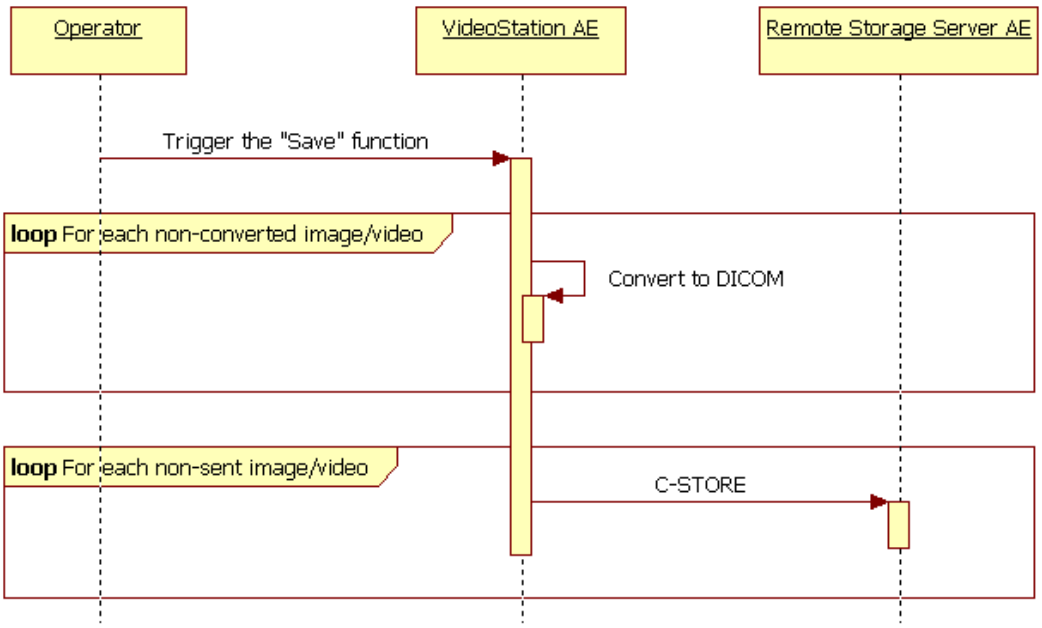

Figure 3. Storing images to Remote AE

4.2.2.3.1.2 Proposed Presentation Contexts

Table 9. Proposed Presentation Contexts for Storage Client AE

Abstract Syntax		Transfer Syntax		Role	Ext. Neg.
Name	**UID**	**Name List**	**UID List**		
Secondary Capture Image Storage	1.2.840.10008.5.1.4.1.1.7	Transfer Syntaxes for Image/Video Storage Services (see Table 9)		SCU	None

Table 10. Proposed Transfer Syntaxes for Image/Video Storage Services

Name	UID
Implicit VR Little Endian [1]	1.2.840.10008.1.2
JPEG Baseline (Process 1)	1.2.840.10008.1.2.4.50
MPEG-2 Main Profile Main Level	1.2.840.10008.1.2.4.100
MPEG-2 Main Profile High Level	1.2.840.10008.1.2.4.101
MPEG-4 AVC/H.264 High Profile / Level 4.1	1.2.840.10008.1.2.4.102
MPEG-4 AVC/H.264 BD-compatible High Profile / Level 4.1	1.2.840.10008.1.2.4.103

[1] ILE is offered together with each compressed syntax due to a corresponding requirement in the DICOM Standard. However, the Storage Client is incapable of converting between transfer syntaxes. The storage operation will only succeed if the SCP supports the original compressed syntax.

4.2.2.3.1.3 SOP Specific Conformance for Storage SOP Classes

The associated Activity with the Storage Client is the storage of medical DICOM data specified by the operator over the network to the SCP. The Storage Client AE will indicate a failure if it is unable to send any of the specified instances. It always attempts to send all remaining instances despite of failure with a particular one.
During the Save operation the DICOM instances are created with JPEG Baseline transfer syntax (for snapshots) and one of compressed video syntaxes from Table 10 (for videos). The default compressed video syntax is MPEG–4, however the operator can also choose any of the other two in the VideoStation settings.
If the remote Storage SCP returns the compression–related context marked as unsupported, then the Client will abort the Association as it does not perform any transfer syntax conversions, too. **Storage SCPs compatible with VideoStation must support JPEG Baseline (Process 1) and a particular compressed video transfer syntax from Table 10.**

Table 11. Storage Client C-STORE Response Status Handling Behavior

Service Status	Further Meaning	Error Code	Behavior
Success	Success	0000	The Composite SOP Instance was successfully received and stored in the system repository by the SCP. Send the next instance.
Warning	Data Element Coercion	B000	The SCP has corrected some Data Element(s) to avoid a conflict. Warning indication message might be copied to the application logs. Assume that the Instance has been stored successfully and send the next instance.
	Elements Discarded	B006	Some Data Element(s) were discarded by the SCP. Warning indication message might be copied to the application logs. Assume that the Instance has been stored successfully and send the next instance.
	Data Set does not match SOP Class	B007	Assume that the SCP has stored the Instance anyway. Warning indication message might be copied to the application logs. Send the next instance.
Error	Others	Others	Any unrecognized Error Code is considered an indication that the Instance wasn't stored. Error indication message might be copied to the application logs and an overall "failure" message will be displayed at the end of the operation. Send the next instance.

4.2.3 Modality Worklist Client Application Entity Specification

4.2.3.1 SOP Classes

Table 12. SOP Classes for Modality Worklist Client AE

SOP Class Name	SOP Class UID	SCU	SCP
Modality Worklist Information Model – FIND	1.2.840.10008.5.1.4.31	Yes	No

4.2.3.2 Associations Policies

4.2.3.2.1 General

At a command from the operator, the Modality Worklist Client AE attempts to establish an association with the specified Remote AE. When the association is established, a C–FIND request is made to retrieve a worklist using the defined matching keys. The Modality Worklist Client waits for any C–FIND response. The established association remains active until a C–FIND response from the remote AE indicates the end of worklist items, or until a timeout period expires.
The Modality Worklist Client AE itself does not accept Associations.
The DICOM standard application context name for DICOM 3.0 is always accepted and proposed:

Table 13. DICOM application context name for Modality Worklist Client AE

Application Context Name	1.2.840.10008.3.1.1.1

4.2.3.2.2 Number of Associations

Only a single Association is active at the moment. The results are displayed to the operator only after receiving them from SCP entirely.

4.2.3.2.3 Asynchronous Nature

The Modality Worklist Client does not support asynchronous communication (multiple outstanding transactions over a single Association).

4.2.3.2.4 Implementation Identifying Information

The implementation information for this Application Entity is:

Table 14. DICOM Implementation Class and Version for Modality Worklist Client AE

Implementation Class UID	1.3.6.1.4.1.44316.4
Implementation Version Name	MDSTATION

4.2.3.3 Association Initiation Policy

4.2.3.3.1 Activity – Query Modality Worklist

4.2.3.3.1.1 Description and Sequencing of Activity

The Modality Worklist SCU is governed by the WORKLIST configuration and search dialog that provides study and patient data for the next acquisition.
The dialog allows to enter patient ID, patient name (first name or last name, or middle name, or full name separated parts by "^"), accession number, requested procedure ID and procedure date (scheduled procedure step start date). From the settings, operator can set scheduled AE Title, modality and enable wildcard option.
Wildcards will be added to patient ID, patient name, accession number and procedure ID search parameters.
After receiving search results, the application updates the list from which an existing patient can be chosen.
The operator can select an entry and press the button at the bottom at the list.
After conformation – creates study according item data and navigates to CURRENT STUDY dialog.

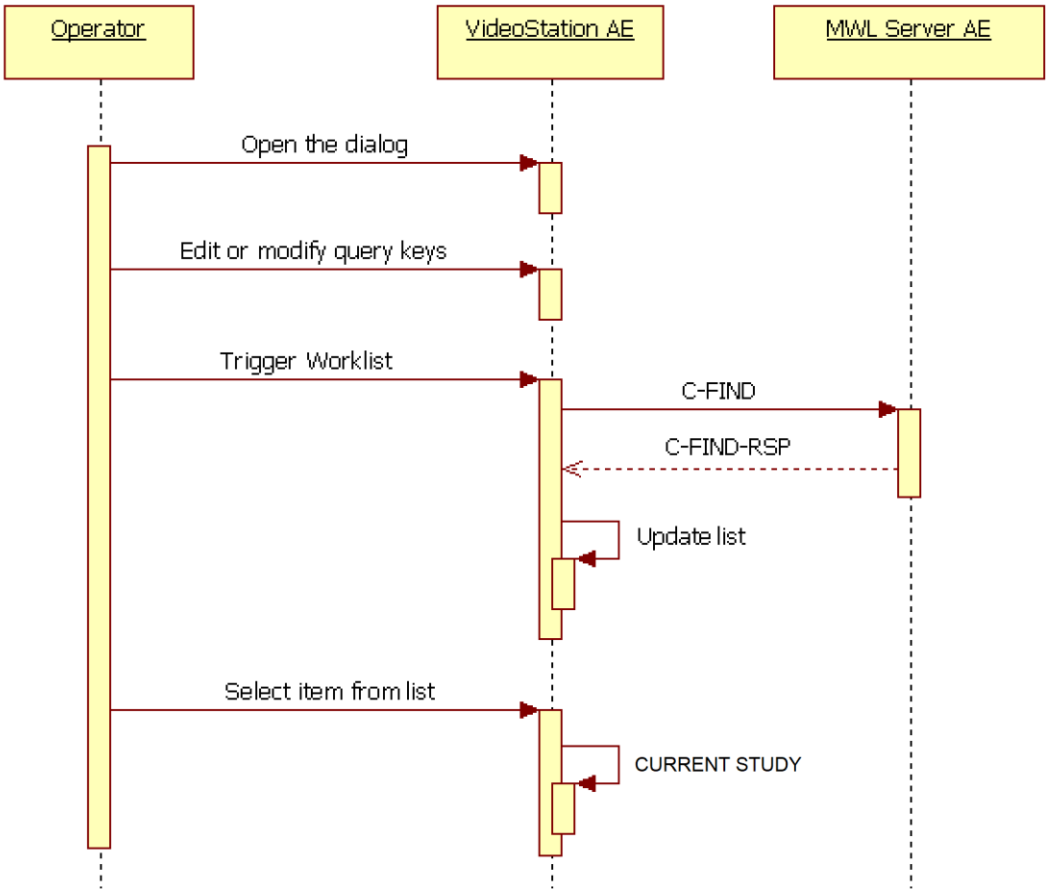

Figure 4. Searching in a Modality Worklist

4.2.3.3.2.2 Proposed Presentation Contexts

Table 15. Proposed Presentation Contexts for Modality Worklist Client AE

Abstract Syntax		Transfer Syntax		Role	Ext. Neg.
Name	**UID**	**Name List**	**UID List**		
Modality Worklist Information Model – FIND	1.2.840.10008.5.1.4.31	Implicit VR Little Endian	1.2.840.10008.1.2	SCU	None
		Explicit VR Little Endian	1.2.840.10008.1.2.1		
		Explicit VR Big Endian	1.2.840.10008.1.2.2		

4.2.3.3.2.3 SOP Specific Conformance for Modality Worklist SOP Class

Table 16. Modality Worklist Client C-STORE Response Status Handling Behavior

Service Status	Further Meaning	Error Code	Behavior

Success	Matching is complete	0000	This is the last response and the Client will release the Association after collecting results. Then the pick–list will be updated.
Pending	Matching is continuing	FF00	The Client waits for another response.

Table 17. Modality Worklist Client Communication Failure Behavior

Exception	Behavior
Association aborted by the SCP or the network layers indicate communication loss (i.e. low–level TCP/IP socket closure)	Error message might go to the application logs. The pick–list is is updated with as many entries as possible.

The attributes listed below will be requested in a query. The corresponding matching keys are empty if the operator didn't specify a particular value.

Table 18. Modality Worklist C-FIND SCU Supported Elements

Tag	VR	Attribute Name	Query key	Displayed	Imported
(0008,0050)	SH	Accession Number	P	X	X
(0008,0090)	PN	Referring Physician Name	—	X	X
(0008,1080)	LO	Admitting Diagnoses Description	—	X	X
(0008,1110)	SQ	Referenced Study Sequence			
>(0008,1150)	UI	Referenced SOP Class UID	—	X	X
>(0008,1155)	UI	Referenced SOP Instance UID	—	X	X
(0008,1125)	SQ	Referenced Patient Sequence			
>(0008,1150)	UI	Referenced SOP Class UID	—	X	X
>(0008,1155)	UI	Referenced SOP Instance UID	—	X	X
(0010,0010)	PN	Patient's Name	P	X	X
(0010,0020)	LO	Patient ID	P	X	X
(0010,0021)	LO	Issuer of Patient ID	—	X	X
(0010,0030)	DA	Patient's Birth Date	—	X	X
(0010,0040)	CS	Patient's Sex	—	X	X
(0010,1030)	DS	Patient's Weight	—	X	X
(0010,2000)	LO	Medical Alerts	—	X	X
(0010,2110)	LO	Allergies	—	X	X
(0010,21b0)	LT	Additional Patient History	—	X	X
(0010,21c0)	US	Pregnancy Status	—	X	X
(0020,000D)	UI	Study Instance UID	—	X	X
(0032,1032)	PN	Requesting Physician	—	X	—
(0032,1033)	PN	Requesting Service	—	X	—
(0032,1060)	LO	Requested Procedure Description	—	X	X
(0032,1064)	SQ	Requested Procedure Code Sequence			
>(0008,0100)	SH	Code Value	—	X	X

>(0008,0102)	SH	Coding Scheme Designator	—	X	X
>(0008,0103)	SH	Coding Scheme Version	—	X	X
>(0008,0104)	LO	Code Meaning	—	X	X
(0038,0010)	LO	Admission ID	—	X	X
(0038,0050)	LO	Special Needs	—	X	—
(0038,0300)	LO	Current Patient Location	—	X	—
(0038,0500)	LO	Patient State	—	X	X
(0040,0100)	SQ	Scheduled Procedure Step Sequence			
>(0008,0060)	SH	Modality	C	X	X
>(0032,1070)	LO	Requested Contrast Agent	—	X	—
>(0040,0001)	AE	Scheduled Station AE Title	C	X	—
>(0040,0002)	DA	Scheduled Procedure Step Start Date	X	X	—
>(0040,0003)	TM	Scheduled Procedure Step Start Time	—	X	—
>(0040,0006)	PN	Scheduled Performing Physician's Name	—	X	—
>(0040,0007)	LO	Scheduled Procedure Step Description	—	X	X
>(0040,0008)	SQ	Scheduled Protocol Code Sequence			
>>(0008,0100)	SH	Code Value	—	X	X
>>(0008,0102)	SH	Coding Scheme Designator	—	X	X
>>(0008,0103)	SH	Coding Scheme Version	—	X	X
>>(0008,0104)	LO	Code Meaning	—	X	X
>(0040,0009)	SH	Scheduled Procedure Step ID	—	X	X
>(0040,0010)	SH	Scheduled Station Name	—	X	—
>(0040,0011)	SH	Scheduled Procedure Step Location	—	X	—
>(0040,0012)	LO	Pre–Medication	—	X	—
>(0040,0020)	CS	Scheduled Procedure Step Status	—	X	—
(0040,1001)	SH	Requested Procedure ID	X	X	X
(0040,1003)	SH	Requested Procedure Priority	—	X	—
(0040,1004)	LO	Patient Transport Arrangements	—	X	—
(0040,2016)	LO	Placer Order Number / Imaging Service Request	—	X	—
(0040,2017)	LO	Filler Order Number / Imaging Service Request	—	X	—
(0040,3001)	LO	Confidentiality Constraint on Patient Data Description	—	X	—

Values for the **Query Key** column:

X

An exact match.

P

A partial match. VideoStation automatically adds leading and trailing wildcards. If both last name and first name is specified, then the pattern becomes `*last*first*`.

C

An exact match. The value comes from VideoStation configuration. The Scheduled Station AET and Modality is a separate setting among worklist server settings.

Values for the **Imported** column:

X

Imported into the application and might be used in the resulting SOP instances. See also the table in 8.1.3 Attribute Mapping.

4.2.4 Storage Server Application Entity Specification

4.2.4.1 SOP Classes

VideoStation Storage Server Application Entity provides Standard Conformance to the following SOP Classes:

Table 19. SOP Classes for Storage Client AE

SOP Class Name	SOP Class UID	SCU	SCP
Verification SOP Class	1.2.840.10008.1.1	No	Yes
Computed Radiography Image Storage	1.2.840.10008.5.1.4.1.1.1	No	Yes
Digital X-Ray Image Storage - For Presentation	1.2.840.10008.5.1.4.1.1.1.1	No	Yes
Digital X-Ray Image Storage - For Processing	1.2.840.10008.5.1.4.1.1.1.1.1	No	Yes
Digital Mammography X-Ray Image Storage - For Presentation	1.2.840.10008.5.1.4.1.1.1.2	No	Yes
Digital Mammography X-Ray Image Storage - For Processing	1.2.840.10008.5.1.4.1.1.1.2.1	No	Yes
Digital Intra-Oral X-Ray Image Storage - For Presentation	1.2.840.10008.5.1.4.1.1.1.3	No	Yes
Digital Intra-Oral X-Ray Image Storage - For Processing	1.2.840.10008.5.1.4.1.1.1.3.1	No	Yes
CT Image Storage	1.2.840.10008.5.1.4.1.1.2	No	Yes
Enhanced CT Image Storage	1.2.840.10008.5.1.4.1.1.2.1	No	Yes
Legacy Converted Enhanced CT Image Storage	1.2.840.10008.5.1.4.1.1.2.2	No	Yes
Ultrasound Multi-frame Image Storage (Retired)	1.2.840.10008.5.1.4.1.1.3	No	Yes
Ultrasound Multi-frame Image Storage	1.2.840.10008.5.1.4.1.1.3.1	No	Yes
MR Image Storage	1.2.840.10008.5.1.4.1.1.4	No	Yes
Enhanced MR Image Storage	1.2.840.10008.5.1.4.1.1.4.1	No	Yes

MR Spectroscopy Storage	1.2.840.10008.5.1.4.1.1.4.2	No	Yes
Enhanced MR Color Image Storage	1.2.840.10008.5.1.4.1.1.4.3	No	Yes
Legacy Converted Enhanced MR Image Storage	1.2.840.10008.5.1.4.1.1.4.4	No	Yes
Nuclear Medicine Image Storage (Retired)	1.2.840.10008.5.1.4.1.1.5	No	Yes
Ultrasound Image Storage (Retired)	1.2.840.10008.5.1.4.1.1.6	No	Yes
Ultrasound Image Storage	1.2.840.10008.5.1.4.1.1.6.1	No	Yes
Enhanced US Volume Storage	1.2.840.10008.5.1.4.1.1.6.2	No	Yes
Secondary Capture Image Storage	1.2.840.10008.5.1.4.1.1.7	No	Yes
Multi-frame Single Bit Secondary Capture Image Storage	1.2.840.10008.5.1.4.1.1.7.1	No	Yes
Multi-frame Grayscale Byte Secondary Capture Image Storage	1.2.840.10008.5.1.4.1.1.7.2	No	Yes
Multi-frame Grayscale Word Secondary Capture Image Storage	1.2.840.10008.5.1.4.1.1.7.3	No	Yes
Multi-frame True Color Secondary Capture Image Storage	1.2.840.10008.5.1.4.1.1.7.4	No	Yes
Standalone Overlay Storage (Retired)	1.2.840.10008.5.1.4.1.1.8	No	Yes
Standalone Curve Storage (Retired)	1.2.840.10008.5.1.4.1.1.9	No	Yes
Waveform Storage - Trial (Retired)	1.2.840.10008.5.1.4.1.1.9.1	No	Yes
12-lead ECG Waveform Storage	1.2.840.10008.5.1.4.1.1.9.1.1	No	Yes
General ECG Waveform Storage	1.2.840.10008.5.1.4.1.1.9.1.2	No	Yes
Ambulatory ECG Waveform Storage	1.2.840.10008.5.1.4.1.1.9.1.3	No	Yes
Hemodynamic Waveform Storage	1.2.840.10008.5.1.4.1.1.9.2.1	No	Yes
Cardiac Electrophysiology Waveform Storage	1.2.840.10008.5.1.4.1.1.9.3.1	No	Yes
Basic Voice Audio Waveform Storage	1.2.840.10008.5.1.4.1.1.9.4.1	No	Yes
General Audio Waveform Storage	1.2.840.10008.5.1.4.1.1.9.4.2	No	Yes
Arterial Pulse Waveform Storage	1.2.840.10008.5.1.4.1.1.9.5.1	No	Yes
Respiratory Waveform Storage	1.2.840.10008.5.1.4.1.1.9.6.1	No	Yes
Multi-channel Respiratory Waveform Storage	1.2.840.10008.5.1.4.1.1.9.6.2	No	Yes
Routine Scalp Electroencephalogram Waveform Storage	1.2.840.10008.5.1.4.1.1.9.7.1	No	Yes
Electromyogram Waveform Storage	1.2.840.10008.5.1.4.1.1.9.7.2	No	Yes
Electrooculogram Waveform Storage	1.2.840.10008.5.1.4.1.1.9.7.3	No	Yes

Sleep Electroencephalogram Waveform Storage	1.2.840.10008.5.1.4.1.1.9.7.4	No	Yes
Body Position Waveform Storage	1.2.840.10008.5.1.4.1.1.9.8.1	No	Yes
Standalone Modality LUT Storage (Retired)	1.2.840.10008.5.1.4.1.1.10	No	Yes
Standalone VOI LUT Storage (Retired)	1.2.840.10008.5.1.4.1.1.11	No	Yes
Grayscale Softcopy Presentation State Storage	1.2.840.10008.5.1.4.1.1.11.1	No	Yes
Color Softcopy Presentation State Storage	1.2.840.10008.5.1.4.1.1.11.2	No	Yes
Pseudo-Color Softcopy Presentation State Storage	1.2.840.10008.5.1.4.1.1.11.3	No	Yes
Blending Softcopy Presentation State Storage	1.2.840.10008.5.1.4.1.1.11.4	No	Yes
XA/XRF Grayscale Softcopy Presentation State Storage	1.2.840.10008.5.1.4.1.1.11.5	No	Yes
Grayscale Planar MPR Volumetric Presentation State Storage	1.2.840.10008.5.1.4.1.1.11.6	No	Yes
Compositing Planar MPR Volumetric Presentation State Storage	1.2.840.10008.5.1.4.1.1.11.7	No	Yes
Advanced Blending Presentation State Storage	1.2.840.10008.5.1.4.1.1.11.8	No	Yes
Volume Rendering Volumetric Presentation State Storage	1.2.840.10008.5.1.4.1.1.11.9	No	Yes
Segmented Volume Rendering Volumetric Presentation State Storage	1.2.840.10008.5.1.4.1.1.11.10	No	Yes
Multiple Volume Rendering Volumetric Presentation State Storage	1.2.840.10008.5.1.4.1.1.11.11	No	Yes
X-Ray Angiographic Image Storage	1.2.840.10008.5.1.4.1.1.12.1	No	Yes
Enhanced XA Image Storage	1.2.840.10008.5.1.4.1.1.12.1.1	No	Yes
X-Ray Radiofluoroscopic Image Storage	1.2.840.10008.5.1.4.1.1.12.2	No	Yes
Enhanced XRF Image Storage	1.2.840.10008.5.1.4.1.1.12.2.1	No	Yes
X-Ray Angiographic Bi-Plane Image Storage (Retired)	1.2.840.10008.5.1.4.1.1.12.3	No	Yes
X-Ray 3D Angiographic Image Storage1.2.840.10008.5.1.4.1.1.13.1.1X-Ray 3D Craniofacial Image Storage	1.2.840.10008.5.1.4.1.1.13.1.2	No	Yes
Breast Tomosynthesis Image Storage	1.2.840.10008.5.1.4.1.1.13.1.3	No	Yes
Breast Projection X-Ray Image Storage - For Presentation	1.2.840.10008.5.1.4.1.1.13.1.4	No	Yes

Breast Projection X-Ray Image Storage - For Processing	1.2.840.10008.5.1.4.1.1.13.1.5	No	Yes
Intravascular Optical Coherence Tomography Image Storage - For Presentation	1.2.840.10008.5.1.4.1.1.14.1	No	Yes
Intravascular Optical Coherence Tomography Image Storage - For Processing	1.2.840.10008.5.1.4.1.1.14.2	No	Yes
Nuclear Medicine Image Storage	1.2.840.10008.5.1.4.1.1.20	No	Yes
Parametric Map Storage	1.2.840.10008.5.1.4.1.1.30	No	Yes
MR Image Storage Zero Padded (Retired)	1.2.840.10008.5.1.4.1.1.40	No	Yes
Raw Data Storage	1.2.840.10008.5.1.4.1.1.66	No	Yes
Spatial Registration Storage	1.2.840.10008.5.1.4.1.1.66.1	No	Yes
Spatial Fiducials Storage	1.2.840.10008.5.1.4.1.1.66.2	No	Yes
Deformable Spatial Registration Storage	1.2.840.10008.5.1.4.1.1.66.3	No	Yes
Segmentation Storage	1.2.840.10008.5.1.4.1.1.66.4	No	Yes
Surface Segmentation Storage	1.2.840.10008.5.1.4.1.1.66.5	No	Yes
Tractography Results Storage	1.2.840.10008.5.1.4.1.1.66.6	No	Yes
Real World Value Mapping Storage	1.2.840.10008.5.1.4.1.1.67	No	Yes
Surface Scan Mesh Storage	1.2.840.10008.5.1.4.1.1.68.1	No	Yes
Surface Scan Point Cloud Storage	1.2.840.10008.5.1.4.1.1.68.2	No	Yes
VL Image Storage - Trial (Retired)	1.2.840.10008.5.1.4.1.1.77.1	No	Yes
VL Multi-frame Image Storage - Trial (Retired)	1.2.840.10008.5.1.4.1.1.77.2	No	Yes
VL Endoscopic Image Storage	1.2.840.10008.5.1.4.1.1.77.1.1	No	Yes
Video Endoscopic Image Storage	1.2.840.10008.5.1.4.1.1.77.1.1.1	No	Yes
VL Microscopic Image Storage	1.2.840.10008.5.1.4.1.1.77.1.2	No	Yes
Video Microscopic Image Storage	1.2.840.10008.5.1.4.1.1.77.1.2.1	No	Yes
VL Slide-Coordinates Microscopic Image Storage	1.2.840.10008.5.1.4.1.1.77.1.3	No	Yes
VL Photographic Image Storage	1.2.840.10008.5.1.4.1.1.77.1.4	No	Yes
Video Photographic Image Storage	1.2.840.10008.5.1.4.1.1.77.1.4.1	No	Yes
Ophthalmic Photography 8 Bit Image Storage	1.2.840.10008.5.1.4.1.1.77.1.5.1	No	Yes
Ophthalmic Photography 16 Bit Image Storage	1.2.840.10008.5.1.4.1.1.77.1.5.2	No	Yes
Stereometric Relationship Storage	1.2.840.10008.5.1.4.1.1.77.1.5.3	No	Yes
Ophthalmic Tomography Image Storage	1.2.840.10008.5.1.4.1.1.77.1.5.4	No	Yes

Wide Field Ophthalmic Photography Stereographic Projection Image Storage	1.2.840.10008.5.1.4.1.1.77.1.5.5	No	Yes
Wide Field Ophthalmic Photography 3D Coordinates Image Storage	1.2.840.10008.5.1.4.1.1.77.1.5.6	No	Yes
Ophthalmic Optical Coherence Tomography En Face Image Storage	1.2.840.10008.5.1.4.1.1.77.1.5.7	No	Yes
Ophthalmic Optical Coherence Tomography B-scan Volume Analysis Storage	1.2.840.10008.5.1.4.1.1.77.1.5.8	No	Yes
VL Whole Slide Microscopy Image Storage	1.2.840.10008.5.1.4.1.1.77.1.6	No	Yes
Dermoscopic Photography Image Storage	1.2.840.10008.5.1.4.1.1.77.1.7	No	Yes
Lensometry Measurements Storage	1.2.840.10008.5.1.4.1.1.78.1	No	Yes
Autorefraction Measurements Storage	1.2.840.10008.5.1.4.1.1.78.2	No	Yes
Keratometry Measurements Storage	1.2.840.10008.5.1.4.1.1.78.3	No	Yes
Subjective Refraction Measurements Storage	1.2.840.10008.5.1.4.1.1.78.4	No	Yes
Visual Acuity Measurements Storage	1.2.840.10008.5.1.4.1.1.78.5	No	Yes
Spectacle Prescription Report Storage	1.2.840.10008.5.1.4.1.1.78.6	No	Yes
Ophthalmic Axial Measurements Storage	1.2.840.10008.5.1.4.1.1.78.7	No	Yes
Intraocular Lens Calculations Storage	1.2.840.10008.5.1.4.1.1.78.8	No	Yes
Macular Grid Thickness and Volume Report Storage	1.2.840.10008.5.1.4.1.1.79.1	No	Yes
Ophthalmic Visual Field Static Perimetry Measurements Storage	1.2.840.10008.5.1.4.1.1.80.1	No	Yes
Ophthalmic Thickness Map Storage	1.2.840.10008.5.1.4.1.1.81.1	No	Yes
Corneal Topography Map Storage	1.2.840.10008.5.1.4.1.1.82.1	No	Yes
Text SR Storage - Trial (Retired)	1.2.840.10008.5.1.4.1.1.88.1	No	Yes
Audio SR Storage - Trial (Retired)	1.2.840.10008.5.1.4.1.1.88.2	No	Yes
Detail SR Storage - Trial (Retired)	1.2.840.10008.5.1.4.1.1.88.3	No	Yes
Comprehensive SR Storage - Trial (Retired)	1.2.840.10008.5.1.4.1.1.88.4	No	Yes
Basic Text SR Storage	1.2.840.10008.5.1.4.1.1.88.11	No	Yes
Enhanced SR Storage	1.2.840.10008.5.1.4.1.1.88.22	No	Yes
Comprehensive SR Storage	1.2.840.10008.5.1.4.1.1.88.33	No	Yes
Comprehensive 3D SR Storage	1.2.840.10008.5.1.4.1.1.88.34	No	Yes
Extensible SR Storage	1.2.840.10008.5.1.4.1.1.88.35	No	Yes
Procedure Log Storage	1.2.840.10008.5.1.4.1.1.88.40	No	Yes

Mammography CAD SR Storage	1.2.840.10008.5.1.4.1.1.88.50	No	Yes
Key Object Selection Document Storage	1.2.840.10008.5.1.4.1.1.88.59	No	Yes
Chest CAD SR Storage	1.2.840.10008.5.1.4.1.1.88.65	No	Yes
X-Ray Radiation Dose SR Storage	1.2.840.10008.5.1.4.1.1.88.67	No	Yes
Radiopharmaceutical Radiation Dose SR Storage	1.2.840.10008.5.1.4.1.1.88.68	No	Yes
Colon CAD SR Storage	1.2.840.10008.5.1.4.1.1.88.69	No	Yes
Implantation Plan SR Storage	1.2.840.10008.5.1.4.1.1.88.70	No	Yes
Acquisition Context SR Storage	1.2.840.10008.5.1.4.1.1.88.71	No	Yes
Simplified Adult Echo SR Storage	1.2.840.10008.5.1.4.1.1.88.72	No	Yes
Patient Radiation Dose SR Storage	1.2.840.10008.5.1.4.1.1.88.73	No	Yes
Planned Imaging Agent Administration SR Storage	1.2.840.10008.5.1.4.1.1.88.74	No	Yes
Performed Imaging Agent Administration SR Storage	1.2.840.10008.5.1.4.1.1.88.75	No	Yes
Content Assessment Results Storage	1.2.840.10008.5.1.4.1.1.90.1	No	Yes
Encapsulated PDF Storage	1.2.840.10008.5.1.4.1.1.104.1	No	Yes
Encapsulated CDA Storage	1.2.840.10008.5.1.4.1.1.104.2	No	Yes
Encapsulated STL Storage	1.2.840.10008.5.1.4.1.1.104.3	No	Yes
Encapsulated OBJ Storage	1.2.840.10008.5.1.4.1.1.104.4	No	Yes
Encapsulated MTL Storage	1.2.840.10008.5.1.4.1.1.104.5	No	Yes
Positron Emission Tomography Image Storage	1.2.840.10008.5.1.4.1.1.128	No	Yes
Legacy Converted Enhanced PET Image Storage	1.2.840.10008.5.1.4.1.1.128.1	No	Yes
Standalone PET Curve Storage (Retired)	1.2.840.10008.5.1.4.1.1.129	No	Yes
Enhanced PET Image Storage	1.2.840.10008.5.1.4.1.1.130	No	Yes
Basic Structured Display Storage	1.2.840.10008.5.1.4.1.1.131	No	Yes
CT Defined Procedure Protocol Storage	1.2.840.10008.5.1.4.1.1.200.1	No	Yes
CT Performed Procedure Protocol Storage	1.2.840.10008.5.1.4.1.1.200.2	No	Yes
RT Image Storage	1.2.840.10008.5.1.4.1.1.481.1	No	Yes
RT Dose Storage	1.2.840.10008.5.1.4.1.1.481.2	No	Yes
RT Structure Set Storage	1.2.840.10008.5.1.4.1.1.481.3	No	Yes
RT Beams Treatment Record Storage	1.2.840.10008.5.1.4.1.1.481.4	No	Yes
RT Plan Storage	1.2.840.10008.5.1.4.1.1.481.5	No	Yes
RT Brachy Treatment Record Storage	1.2.840.10008.5.1.4.1.1.481.6	No	Yes

RT Treatment Summary Record Storage	1.2.840.10008.5.1.4.1.1.481.7	No	Yes
RT Ion Plan Storage	1.2.840.10008.5.1.4.1.1.481.8	No	Yes
RT Ion Beams Treatment Record Storage	1.2.840.10008.5.1.4.1.1.481.9	No	Yes
RT Physician Intent Storage	1.2.840.10008.5.1.4.1.1.481.10	No	Yes
RT Segment Annotation Storage	1.2.840.10008.5.1.4.1.1.481.11	No	Yes
RT Radiation Set Storage	1.2.840.10008.5.1.4.1.1.481.12	No	Yes
C-Arm Photon-Electron Radiation Storage	1.2.840.10008.5.1.4.1.1.481.13	No	Yes
Tomotherapeutic Radiation Storage	1.2.840.10008.5.1.4.1.1.481.14	No	Yes
Robotic-Arm Radiation Storage	1.2.840.10008.5.1.4.1.1.481.15	No	Yes
RT Radiation Record Set Storage	1.2.840.10008.5.1.4.1.1.481.16	No	Yes
RT Radiation Salvage Record Storage	1.2.840.10008.5.1.4.1.1.481.17	No	Yes
Tomotherapeutic Radiation Record Storage	1.2.840.10008.5.1.4.1.1.481.18	No	Yes
C-Arm Photon-Electron Radiation Record Storage	1.2.840.10008.5.1.4.1.1.481.19	No	Yes
Robotic Radiation Record Storage	1.2.840.10008.5.1.4.1.1.481.20	No	Yes
DICOS CT Image Storage	1.2.840.10008.5.1.4.1.1.501.1	No	Yes
DICOS Digital X-Ray Image Storage - For Presentation	1.2.840.10008.5.1.4.1.1.501.2.1	No	Yes
DICOS Digital X-Ray Image Storage - For Processing	1.2.840.10008.5.1.4.1.1.501.2.2	No	Yes
DICOS Threat Detection Report Storage	1.2.840.10008.5.1.4.1.1.501.3	No	Yes
DICOS 2D AIT Storage	1.2.840.10008.5.1.4.1.1.501.4	No	Yes
DICOS 3D AIT Storage	1.2.840.10008.5.1.4.1.1.501.5	No	Yes
DICOS Quadrupole Resonance (QR) Storage	1.2.840.10008.5.1.4.1.1.501.6	No	Yes
Eddy Current Image Storage	1.2.840.10008.5.1.4.1.1.601.1	No	Yes
Eddy Current Multi-frame Image Storage	1.2.840.10008.5.1.4.1.1.601.2	No	Yes
RT Beams Delivery Instruction Storage - Trial (Retired)	1.2.840.10008.5.1.4.34.1	No	Yes
RT Conventional Machine Verification - Trial (Retired)	1.2.840.10008.5.1.4.34.2	No	Yes
RT Ion Machine Verification - Trial (Retired)	1.2.840.10008.5.1.4.34.3	No	Yes
RT Beams Delivery Instruction Storage	1.2.840.10008.5.1.4.34.7	No	Yes
RT Brachy Application Setup Delivery Instruction Storage	1.2.840.10008.5.1.4.34.10	No	Yes
Hanging Protocol Storage	1.2.840.10008.5.1.4.38.1	No	Yes

Color Palette Storage	1.2.840.10008.5.1.4.39.1	No	Yes
Generic Implant Template Storage	1.2.840.10008.5.1.4.43.1	No	Yes
Implant Assembly Template Storage	1.2.840.10008.5.1.4.44.1	No	Yes
Implant Template Group Storage	1.2.840.10008.5.1.4.45.1	No	Yes
Private TomTec Annotation Storage	1.2.276.0.48.5.1.4.1.1.7	No	Yes
Private Toshiba US Image Storage	1.2.392.200036.9116.7.8.1.1.1	No	Yes
Private Fuji CR Image Storage	1.2.392.200036.9125.1.1.2	No	Yes
Private GE Collage Storage	1.2.528.1.1001.5.1.1.1	No	Yes
Private ERAD Practice Builder Report Text Storage	1.2.826.0.1.3680043.293.1.0.1	No	Yes
Private ERAD Practice Builder Report Dictation Storage	1.2.826.0.1.3680043.293.1.0.2	No	Yes
Private Philips HP Live 3D 01 Storage	1.2.840.113543.6.6.1.3.10001	No	Yes
Private Philips HP Live 3D 02 Storage	1.2.840.113543.6.6.1.3.10002	No	Yes
Private GE 3D Model Storage	1.2.840.113619.4.26	No	Yes
Private GE PET Raw Data Storage	1.2.840.113619.4.30	No	Yes
Private GE RT Plan Storage	1.2.840.113619.4.5.249	No	Yes
Private PixelMed Legacy Converted Enhanced CT Image Storage	1.3.6.1.4.1.5962.301.1	No	Yes
Private PixelMed Legacy Converted Enhanced MR Image Storage	1.3.6.1.4.1.5962.301.2	No	Yes
Private PixelMed Legacy Converted Enhanced PET Image Storage	1.3.6.1.4.1.5962.301.3	No	Yes
Private PixelMed Floating Point Image Storage	1.3.6.1.4.1.5962.301.9	No	Yes
Private Siemens CSA Non Image Storage	1.3.12.2.1107.5.9.1	No	Yes
Private Siemens CT MR Volume Storage	1.3.12.2.1107.5.99.3.10	No	Yes
Private Siemens AX Frame Sets Storage	1.3.12.2.1107.5.99.3.11	No	Yes
Private Philips Specialised XA Storage	1.3.46.670589.2.3.1.1	No	Yes
Private Philips CX Image Storage	1.3.46.670589.2.4.1.1	No	Yes
Private Philips 3D Presentation State Storage	1.3.46.670589.2.5.1.1	No	Yes
Private Philips VRML Storage	1.3.46.670589.2.8.1.1	No	Yes
Private Philips Volume Set Storage	1.3.46.670589.2.11.1.1	No	Yes
Private Philips Volume Storage (Retired)	1.3.46.670589.5.0.1	No	Yes
Private Philips Volume Storage	1.3.46.670589.5.0.1.1	No	Yes

Private Philips 3D Object Storage (Retired)	1.3.46.670589.5.0.2	No	Yes
Private Philips 3D Object Storage	1.3.46.670589.5.0.2.1	No	Yes
Private Philips Surface Storage (Retired)	1.3.46.670589.5.0.3	No	Yes
Private Philips Surface Storage	1.3.46.670589.5.0.3.1	No	Yes
Private Philips Composite Object Storage	1.3.46.670589.5.0.4	No	Yes
Private Philips MR Cardio Profile Storage	1.3.46.670589.5.0.7	No	Yes
Private Philips MR Cardio Storage (Retired)	1.3.46.670589.5.0.8	No	Yes
Private Philips MR Cardio Storage	1.3.46.670589.5.0.8.1	No	Yes
Private Philips CT Synthetic Image Storage	1.3.46.670589.5.0.9	No	Yes
Private Philips MR Synthetic Image Storage	1.3.46.670589.5.0.10	No	Yes
Private Philips MR Cardio Analysis Storage (Retired)	1.3.46.670589.5.0.11	No	Yes
Private Philips MR Cardio Analysis Storage	1.3.46.670589.5.0.11.1	No	Yes
Private Philips CX Synthetic Image Storage	1.3.46.670589.5.0.12	No	Yes
Private Philips Perfusion Storage	1.3.46.670589.5.0.13	No	Yes
Private Philips Perfusion Image Storage	1.3.46.670589.5.0.14	No	Yes
Private Philips X-Ray MF Storage	1.3.46.670589.7.8.1618510091	No	Yes
Private Philips Live Run Storage	1.3.46.670589.7.8.1618510092	No	Yes
Private Philips Run Storage	1.3.46.670589.7.8.16185100129	No	Yes
Private Philips Reconstruction Storage	1.3.46.670589.7.8.16185100130	No	Yes
Private Philips MR Spectrum Storage	1.3.46.670589.11.0.0.12.1	No	Yes
Private Philips MR Series Data Storage	1.3.46.670589.11.0.0.12.2	No	Yes
Private Philips MR Color Image Storage	1.3.46.670589.11.0.0.12.3	No	Yes
Private Philips MR Examcard Storage	1.3.46.670589.11.0.0.12.4	No	Yes
Private PMOD Multi-frame Image Storage	2.16.840.1.114033.5.1.4.1.1.130	No	Yes

4.2.4.2 Associations Policies

4.2.4.2.1 General

The Storage Server can accept Association Requests for the Verification and Storage services.

The DICOM standard application context name for DICOM 3.0 is always accepted and proposed:

Table 20. DICOM application context name for Storage Server AE

Application Context Name	1.2.840.10008.3.1.1.1

4.2.4.2.2 Number of Associations

The number of active Associations is limited only by system resources.

4.2.4.2.3 Asynchronous Nature

The Storage Server does not support asynchronous communication (multiple outstanding transactions over a single Association).

4.2.4.2.4 Implementation Identifying Information

The implementation information for this Application Entity is:

Table 21. DICOM Implementation Class and Version for Storage Server AE

Implementation Class UID	1.3.6.1.4.1.44316.4
Implementation Version Name	MDSTATION

4.2.4.3 Association Initiation Policy

4.2.2.3.1 Activity – Receive DICOM Instances

4.2.4.3.1.1 Description and Sequencing of Activity

This activity is illustrated by "Upload earlier studies of this patient" in Fig. 2.

The VideoStation Storage Server AE waits for Associations at the configured TCP/IP port. Verification and Storage requests are handled immediately; received SOP Instances are stored in *InstallationDirectory*\DICOM.

SOP instance receive completed - triggers DICOM parser and extracts important metadata like Patient Name, Study Instance UID, etc. and stores it in a local database.

4.2.4.3.1.2 Accepted Presentation Contexts

Table 22. Accepted Presentation Contexts for Storage Server AE

Abstract Syntax		**Transfer Syntax**		**Role**	**Ext. Neg.**
Name	**UID**	**Name List**	**UID List**		
Verification SOP Class	1.2.840.10008.1.1	Implicit VR Little Endian	1.2.840.10008.1.2	SCP	None
Computed Radiography Image Storage	1.2.840.10008.5.1.4.1.1.1	Transfer Syntaxes for Received SOP Instances (see Table 23)		SCP	None
Digital X-Ray Image Storage - For Presentation	1.2.840.10008.5.1.4.1.1.1.1	Transfer Syntaxes for Received SOP Instances (see Table 23)		SCP	None
Digital X-Ray Image Storage - For Processing	1.2.840.10008.5.1.4.1.1.1.1.1	Transfer Syntaxes for Received SOP Instances (see Table 23)		SCP	None

Digital Mammography X-Ray Image Storage - For Presentation	1.2.840.10008.5.1.4.1.1.1.2	Transfer Syntaxes for Received SOP Instances (see Table 23)	SCP	None
Digital Mammography X-Ray Image Storage - For Processing	1.2.840.10008.5.1.4.1.1.1.2.1	Transfer Syntaxes for Received SOP Instances (see Table 23)	SCP	None
Digital Intra-Oral X-Ray Image Storage - For Presentation	1.2.840.10008.5.1.4.1.1.1.3	Transfer Syntaxes for Received SOP Instances (see Table 23)	SCP	None
Digital Intra-Oral X-Ray Image Storage - For Processing	1.2.840.10008.5.1.4.1.1.1.3.1	Transfer Syntaxes for Received SOP Instances (see Table 23)	SCP	None
CT Image Storage	1.2.840.10008.5.1.4.1.1.2	Transfer Syntaxes for Received SOP Instances (see Table 23)	SCP	None
Enhanced CT Image Storage	1.2.840.10008.5.1.4.1.1.2.1	Transfer Syntaxes for Received SOP Instances (see Table 23)	SCP	None
Legacy Converted Enhanced CT Image Storage	1.2.840.10008.5.1.4.1.1.2.2	Transfer Syntaxes for Received SOP Instances (see Table 23)	SCP	None
Ultrasound Multi-frame Image Storage (Retired)	1.2.840.10008.5.1.4.1.1.3	Transfer Syntaxes for Received SOP Instances (see Table 23)	SCP	None
Ultrasound Multi-frame Image Storage	1.2.840.10008.5.1.4.1.1.3.1	Transfer Syntaxes for Received SOP Instances (see Table 23)	SCP	None
MR Image Storage	1.2.840.10008.5.1.4.1.1.4	Transfer Syntaxes for Received SOP Instances (see Table 23)	SCP	None
Enhanced MR Image Storage	1.2.840.10008.5.1.4.1.1.4.1	Transfer Syntaxes for Received SOP Instances (see Table 23)	SCP	None
MR Spectroscopy Storage	1.2.840.10008.5.1.4.1.1.4.2	Transfer Syntaxes for Received SOP Instances (see Table 23)	SCP	None
Enhanced MR Color Image Storage	1.2.840.10008.5.1.4.1.1.4.3	Transfer Syntaxes for Received SOP Instances (see Table 23)	SCP	None
Legacy Converted Enhanced MR Image Storage	1.2.840.10008.5.1.4.1.1.4.4	Transfer Syntaxes for Received SOP Instances (see Table 23)	SCP	None
Nuclear Medicine Image Storage (Retired)	1.2.840.10008.5.1.4.1.1.5	Transfer Syntaxes for Received SOP Instances (see Table 23)	SCP	None
Ultrasound Image Storage (Retired)	1.2.840.10008.5.1.4.1.1.6	Transfer Syntaxes for Received SOP Instances (see Table 23)	SCP	None
Ultrasound Image Storage	1.2.840.10008.5.1.4.1.1.6.1	Transfer Syntaxes for Received SOP Instances (see Table 23)	SCP	None
Enhanced US Volume Storage	1.2.840.10008.5.1.4.1.1.6.2	Transfer Syntaxes for Received SOP Instances (see Table 23)	SCP	None
Secondary Capture Image Storage	1.2.840.10008.5.1.4.1.1.7	Transfer Syntaxes for Storage Services (see Table 23)	SCP	None
Multi-frame Single Bit Secondary Capture Image Storage	1.2.840.10008.5.1.4.1.1.7.1	Transfer Syntaxes for Received SOP Instances (see Table 23)	SCP	None

Multi-frame Grayscale Byte Secondary Capture Image Storage	1.2.840.10008.5.1.4.1.1.7.2	Transfer Syntaxes for Received SOP Instances (see Table 23)	SCP	None
Multi-frame Grayscale Word Secondary Capture Image Storage	1.2.840.10008.5.1.4.1.1.7.3	Transfer Syntaxes for Received SOP Instances (see Table 23)	SCP	None
Multi-frame True Color Secondary Capture Image Storage	1.2.840.10008.5.1.4.1.1.7.4	Transfer Syntaxes for Received SOP Instances (see Table 23)	SCP	None
Standalone Overlay Storage (Retired)	1.2.840.10008.5.1.4.1.1.8	Transfer Syntaxes for Received SOP Instances (see Table 23)	SCP	None
Standalone Curve Storage (Retired)	1.2.840.10008.5.1.4.1.1.9	Transfer Syntaxes for Received SOP Instances (see Table 23)	SCP	None
Waveform Storage - Trial (Retired)	1.2.840.10008.5.1.4.1.1.9.1	Transfer Syntaxes for Received SOP Instances (see Table 23)	SCP	None
12-lead ECG Waveform Storage	1.2.840.10008.5.1.4.1.1.9.1.1	Transfer Syntaxes for Received SOP Instances (see Table 23)	SCP	None
General ECG Waveform Storage	1.2.840.10008.5.1.4.1.1.9.1.2	Transfer Syntaxes for Received SOP Instances (see Table 23)	SCP	None
Ambulatory ECG Waveform Storage	1.2.840.10008.5.1.4.1.1.9.1.3	Transfer Syntaxes for Received SOP Instances (see Table 23)	SCP	None
Hemodynamic Waveform Storage	1.2.840.10008.5.1.4.1.1.9.2.1	Transfer Syntaxes for Received SOP Instances (see Table 23)	SCP	None
Cardiac Electrophysiology Waveform Storage	1.2.840.10008.5.1.4.1.1.9.3.1	Transfer Syntaxes for Received SOP Instances (see Table 23)	SCP	None
Basic Voice Audio Waveform Storage	1.2.840.10008.5.1.4.1.1.9.4.1	Transfer Syntaxes for Received SOP Instances (see Table 23)	SCP	None
General Audio Waveform Storage	1.2.840.10008.5.1.4.1.1.9.4.2	Transfer Syntaxes for Received SOP Instances (see Table 23)	SCP	None
Arterial Pulse Waveform Storage	1.2.840.10008.5.1.4.1.1.9.5.1	Transfer Syntaxes for Received SOP Instances (see Table 23)	SCP	None
Respiratory Waveform Storage	1.2.840.10008.5.1.4.1.1.9.6.1	Transfer Syntaxes for Received SOP Instances (see Table 23)	SCP	None
Multi-channel Respiratory Waveform Storage	1.2.840.10008.5.1.4.1.1.9.6.2	Transfer Syntaxes for Received SOP Instances (see Table 23)	SCP	None
Routine Scalp Electroencephalogram Waveform Storage	1.2.840.10008.5.1.4.1.1.9.7.1	Transfer Syntaxes for Received SOP Instances (see Table 23)	SCP	None
Electromyogram Waveform Storage	1.2.840.10008.5.1.4.1.1.9.7.2	Transfer Syntaxes for Received SOP Instances (see Table 23)	SCP	None
Electrooculogram Waveform Storage	1.2.840.10008.5.1.4.1.1.9.7.3	Transfer Syntaxes for Received SOP Instances (see Table 23)	SCP	None

Sleep Electroencephalogram Waveform Storage	1.2.840.10008.5.1.4.1.1.9.7.4	Transfer Syntaxes for Received SOP Instances (see Table 23)	SCP	None
Body Position Waveform Storage	1.2.840.10008.5.1.4.1.1.9.8.1	Transfer Syntaxes for Received SOP Instances (see Table 23)	SCP	None
Standalone Modality LUT Storage (Retired)	1.2.840.10008.5.1.4.1.1.10	Transfer Syntaxes for Received SOP Instances (see Table 23)	SCP	None
Standalone VOI LUT Storage (Retired)	1.2.840.10008.5.1.4.1.1.11	Transfer Syntaxes for Received SOP Instances (see Table 23)	SCP	None
Grayscale Softcopy Presentation State Storage	1.2.840.10008.5.1.4.1.1.11.1	Transfer Syntaxes for Received SOP Instances (see Table 23)	SCP	None
Color Softcopy Presentation State Storage	1.2.840.10008.5.1.4.1.1.11.2	Transfer Syntaxes for Received SOP Instances (see Table 23)	SCP	None
Pseudo-Color Softcopy Presentation State Storage	1.2.840.10008.5.1.4.1.1.11.3	Transfer Syntaxes for Received SOP Instances (see Table 23)	SCP	None
Blending Softcopy Presentation State Storage	1.2.840.10008.5.1.4.1.1.11.4	Transfer Syntaxes for Received SOP Instances (see Table 23)	SCP	None
XA/XRF Grayscale Softcopy Presentation State Storage	1.2.840.10008.5.1.4.1.1.11.5	Transfer Syntaxes for Received SOP Instances (see Table 23)	SCP	None
Grayscale Planar MPR Volumetric Presentation State Storage	1.2.840.10008.5.1.4.1.1.11.6	Transfer Syntaxes for Received SOP Instances (see Table 23)	SCP	None
Compositing Planar MPR Volumetric Presentation State Storage	1.2.840.10008.5.1.4.1.1.11.7	Transfer Syntaxes for Received SOP Instances (see Table 23)	SCP	None
Advanced Blending Presentation State Storage	1.2.840.10008.5.1.4.1.1.11.8	Transfer Syntaxes for Received SOP Instances (see Table 23)	SCP	None
Volume Rendering Volumetric Presentation State Storage	1.2.840.10008.5.1.4.1.1.11.9	Transfer Syntaxes for Received SOP Instances (see Table 23)	SCP	None
Segmented Volume Rendering Volumetric Presentation State Storage	1.2.840.10008.5.1.4.1.1.11.10	Transfer Syntaxes for Received SOP Instances (see Table 23)	SCP	None
Multiple Volume Rendering Volumetric Presentation State Storage	1.2.840.10008.5.1.4.1.1.11.11	Transfer Syntaxes for Received SOP Instances (see Table 23)	SCP	None
X-Ray Angiographic Image Storage	1.2.840.10008.5.1.4.1.1.12.1	Transfer Syntaxes for Received SOP Instances (see Table 23)	SCP	None
Enhanced XA Image Storage	1.2.840.10008.5.1.4.1.1.12.1.1	Transfer Syntaxes for Received SOP Instances (see Table 23)	SCP	None
X-Ray Radiofluoroscopic Image Storage	1.2.840.10008.5.1.4.1.1.12.2	Transfer Syntaxes for Received SOP Instances (see Table 23)	SCP	None
Enhanced XRF Image Storage	1.2.840.10008.5.1.4.1.1.12.2.1	Transfer Syntaxes for Received SOP Instances (see Table 23)	SCP	None

X-Ray Angiographic Bi-Plane Image Storage (Retired)	1.2.840.10008.5.1.4.1.1.12.3	Transfer Syntaxes for Received SOP Instances (see Table 23)	SCP	None
X-Ray 3D Angiographic Image StorageX-Ray 3D Craniofacial Image Storage	1.2.840.10008.5.1.4.1.1.13.1.11.2.840.10008.5.1.4.1.1.13.1.2	Transfer Syntaxes for Received SOP Instances (see Table 23)	SCP	None
Breast Tomosynthesis Image Storage	1.2.840.10008.5.1.4.1.1.13.1.3	Transfer Syntaxes for Received SOP Instances (see Table 23)	SCP	None
Breast Projection X-Ray Image Storage - For Presentation	1.2.840.10008.5.1.4.1.1.13.1.4	Transfer Syntaxes for Received SOP Instances (see Table 23)	SCP	None
Breast Projection X-Ray Image Storage - For Processing	1.2.840.10008.5.1.4.1.1.13.1.5	Transfer Syntaxes for Received SOP Instances (see Table 23)	SCP	None
IntravaSCPlar Optical Coherence Tomography Image Storage - For Presentation	1.2.840.10008.5.1.4.1.1.14.1	Transfer Syntaxes for Received SOP Instances (see Table 23)	SCP	None
IntravaSCPlar Optical Coherence Tomography Image Storage - For Processing	1.2.840.10008.5.1.4.1.1.14.2	Transfer Syntaxes for Received SOP Instances (see Table 23)	SCP	None
Nuclear Medicine Image Storage	1.2.840.10008.5.1.4.1.1.20	Transfer Syntaxes for Received SOP Instances (see Table 23)	SCP	None
Parametric Map Storage	1.2.840.10008.5.1.4.1.1.30	Transfer Syntaxes for Received SOP Instances (see Table 23)	SCP	None
MR Image Storage Zero Padded (Retired)	1.2.840.10008.5.1.4.1.1.40	Transfer Syntaxes for Received SOP Instances (see Table 23)	SCP	None
Raw Data Storage	1.2.840.10008.5.1.4.1.1.66	Transfer Syntaxes for Received SOP Instances (see Table 23)	SCP	None
Spatial Registration Storage	1.2.840.10008.5.1.4.1.1.66.1	Transfer Syntaxes for Received SOP Instances (see Table 23)	SCP	None
Spatial Fiducials Storage	1.2.840.10008.5.1.4.1.1.66.2	Transfer Syntaxes for Received SOP Instances (see Table 23)	SCP	None
Deformable Spatial Registration Storage	1.2.840.10008.5.1.4.1.1.66.3	Transfer Syntaxes for Received SOP Instances (see Table 23)	SCP	None
Segmentation Storage	1.2.840.10008.5.1.4.1.1.66.4	Transfer Syntaxes for Received SOP Instances (see Table 23)	SCP	None
Surface Segmentation Storage	1.2.840.10008.5.1.4.1.1.66.5	Transfer Syntaxes for Received SOP Instances (see Table 23)	SCP	None
Tractography Results Storage	1.2.840.10008.5.1.4.1.1.66.6	Transfer Syntaxes for Received SOP Instances (see Table 23)	SCP	None
Real World Value Mapping Storage	1.2.840.10008.5.1.4.1.1.67	Transfer Syntaxes for Received SOP Instances (see Table 23)	SCP	None
Surface Scan Mesh Storage	1.2.840.10008.5.1.4.1.1.68.1	Transfer Syntaxes for Received SOP Instances (see Table 23)	SCP	None
Surface Scan Point Cloud Storage	1.2.840.10008.5.1.4.1.1.68.2	Transfer Syntaxes for Received SOP Instances (see Table 23)	SCP	None

VL Image Storage - Trial (Retired)	1.2.840.10008.5.1.4.1.1.77.1	Transfer Syntaxes for Received SOP Instances (see Table 23)	SCP	None
VL Multi-frame Image Storage - Trial (Retired)	1.2.840.10008.5.1.4.1.1.77.2	Transfer Syntaxes for Received SOP Instances (see Table 23)	SCP	None
VL Endoscopic Image Storage	1.2.840.10008.5.1.4.1.1.77.1.1	Transfer Syntaxes for Received SOP Instances (see Table 23)	SCP	None
Video Endoscopic Image Storage	1.2.840.10008.5.1.4.1.1.77.1.1.1	Transfer Syntaxes for Received SOP Instances (see Table 23)	SCP	None
VL Microscopic Image Storage	1.2.840.10008.5.1.4.1.1.77.1.2	Transfer Syntaxes for Received SOP Instances (see Table 23)	SCP	None
Video Microscopic Image Storage	1.2.840.10008.5.1.4.1.1.77.1.2.1	Transfer Syntaxes for Received SOP Instances (see Table 23)	SCP	None
VL Slide-Coordinates Microscopic Image Storage	1.2.840.10008.5.1.4.1.1.77.1.3	Transfer Syntaxes for Received SOP Instances (see Table 23)	SCP	None
VL Photographic Image Storage	1.2.840.10008.5.1.4.1.1.77.1.4	Transfer Syntaxes for Received SOP Instances (see Table 23)	SCP	None
Video Photographic Image Storage	1.2.840.10008.5.1.4.1.1.77.1.4.1	Transfer Syntaxes for Received SOP Instances (see Table 23)	SCP	None
Ophthalmic Photography 8 Bit Image Storage	1.2.840.10008.5.1.4.1.1.77.1.5.1	Transfer Syntaxes for Received SOP Instances (see Table 23)	SCP	None
Ophthalmic Photography 16 Bit Image Storage	1.2.840.10008.5.1.4.1.1.77.1.5.2	Transfer Syntaxes for Received SOP Instances (see Table 23)	SCP	None
Stereometric Relationship Storage	1.2.840.10008.5.1.4.1.1.77.1.5.3	Transfer Syntaxes for Received SOP Instances (see Table 23)	SCP	None
Ophthalmic Tomography Image Storage	1.2.840.10008.5.1.4.1.1.77.1.5.4	Transfer Syntaxes for Received SOP Instances (see Table 23)	SCP	None
Wide Field Ophthalmic Photography Stereographic Projection Image Storage	1.2.840.10008.5.1.4.1.1.77.1.5.5	Transfer Syntaxes for Received SOP Instances (see Table 23)	SCP	None
Wide Field Ophthalmic Photography 3D Coordinates Image Storage	1.2.840.10008.5.1.4.1.1.77.1.5.6	Transfer Syntaxes for Received SOP Instances (see Table 23)	SCP	None
Ophthalmic Optical Coherence Tomography En Face Image Storage	1.2.840.10008.5.1.4.1.1.77.1.5.7	Transfer Syntaxes for Received SOP Instances (see Table 23)	SCP	None
Ophthalmic Optical Coherence Tomography B-scan Volume Analysis Storage	1.2.840.10008.5.1.4.1.1.77.1.5.8	Transfer Syntaxes for Received SOP Instances (see Table 23)	SCP	None
VL Whole Slide Microscopy Image Storage	1.2.840.10008.5.1.4.1.1.77.1.6	Transfer Syntaxes for Received SOP Instances (see Table 23)	SCP	None
Dermoscopic Photography Image Storage	1.2.840.10008.5.1.4.1.1.77.1.7	Transfer Syntaxes for Received SOP Instances (see Table 23)	SCP	None

Lensometry Measurements Storage	1.2.840.10008.5.1.4.1.1.78.1	Transfer Syntaxes for Received SOP Instances (see Table 23)	SCP	None
Autorefraction Measurements Storage	1.2.840.10008.5.1.4.1.1.78.2	Transfer Syntaxes for Received SOP Instances (see Table 23)	SCP	None
Keratometry Measurements Storage	1.2.840.10008.5.1.4.1.1.78.3	Transfer Syntaxes for Received SOP Instances (see Table 23)	SCP	None
Subjective Refraction Measurements Storage	1.2.840.10008.5.1.4.1.1.78.4	Transfer Syntaxes for Received SOP Instances (see Table 23)	SCP	None
Visual Acuity Measurements Storage	1.2.840.10008.5.1.4.1.1.78.5	Transfer Syntaxes for Received SOP Instances (see Table 23)	SCP	None
Spectacle Prescription Report Storage	1.2.840.10008.5.1.4.1.1.78.6	Transfer Syntaxes for Received SOP Instances (see Table 23)	SCP	None
Ophthalmic Axial Measurements Storage	1.2.840.10008.5.1.4.1.1.78.7	Transfer Syntaxes for Received SOP Instances (see Table 23)	SCP	None
Intraocular Lens Calculations Storage	1.2.840.10008.5.1.4.1.1.78.8	Transfer Syntaxes for Received SOP Instances (see Table 23)	SCP	None
Macular Grid Thickness and Volume Report Storage	1.2.840.10008.5.1.4.1.1.79.1	Transfer Syntaxes for Received SOP Instances (see Table 23)	SCP	None
Ophthalmic Visual Field Static Perimetry Measurements Storage	1.2.840.10008.5.1.4.1.1.80.1	Transfer Syntaxes for Received SOP Instances (see Table 23)	SCP	None
Ophthalmic Thickness Map Storage	1.2.840.10008.5.1.4.1.1.81.1	Transfer Syntaxes for Received SOP Instances (see Table 23)	SCP	None
Corneal Topography Map Storage	1.2.840.10008.5.1.4.1.1.82.1	Transfer Syntaxes for Received SOP Instances (see Table 23)	SCP	None
Text SR Storage - Trial (Retired)	1.2.840.10008.5.1.4.1.1.88.1	Transfer Syntaxes for Received SOP Instances (see Table 23)	SCP	None
Audio SR Storage - Trial (Retired)	1.2.840.10008.5.1.4.1.1.88.2	Transfer Syntaxes for Received SOP Instances (see Table 23)	SCP	None
Detail SR Storage - Trial (Retired)	1.2.840.10008.5.1.4.1.1.88.3	Transfer Syntaxes for Received SOP Instances (see Table 23)	SCP	None
Comprehensive SR Storage - Trial (Retired)	1.2.840.10008.5.1.4.1.1.88.4	Transfer Syntaxes for Received SOP Instances (see Table 23)	SCP	None
Basic Text SR Storage	1.2.840.10008.5.1.4.1.1.88.11	Transfer Syntaxes for Received SOP Instances (see Table 23)	SCP	None
Enhanced SR Storage	1.2.840.10008.5.1.4.1.1.88.22	Transfer Syntaxes for Received SOP Instances (see Table 23)	SCP	None
Comprehensive SR Storage	1.2.840.10008.5.1.4.1.1.88.33	Transfer Syntaxes for Received SOP Instances (see Table 23)	SCP	None
Comprehensive 3D SR Storage	1.2.840.10008.5.1.4.1.1.88.34	Transfer Syntaxes for Received SOP Instances (see Table 23)	SCP	None
Extensible SR Storage	1.2.840.10008.5.1.4.1.1.88.35	Transfer Syntaxes for Received SOP Instances (see Table 23)	SCP	None

Procedure Log Storage	1.2.840.10008.5.1.4.1.1.88.40	Transfer Syntaxes for Received SOP Instances (see Table 23)	SCP	None
Mammography CAD SR Storage	1.2.840.10008.5.1.4.1.1.88.50	Transfer Syntaxes for Received SOP Instances (see Table 23)	SCP	None
Key Object Selection Document Storage	1.2.840.10008.5.1.4.1.1.88.59	Transfer Syntaxes for Received SOP Instances (see Table 23)	SCP	None
Chest CAD SR Storage	1.2.840.10008.5.1.4.1.1.88.65	Transfer Syntaxes for Received SOP Instances (see Table 23)	SCP	None
X-Ray Radiation Dose SR Storage	1.2.840.10008.5.1.4.1.1.88.67	Transfer Syntaxes for Received SOP Instances (see Table 23)	SCP	None
Radiopharmaceutical Radiation Dose SR Storage	1.2.840.10008.5.1.4.1.1.88.68	Transfer Syntaxes for Received SOP Instances (see Table 23)	SCP	None
Colon CAD SR Storage	1.2.840.10008.5.1.4.1.1.88.69	Transfer Syntaxes for Received SOP Instances (see Table 23)	SCP	None
Implantation Plan SR Storage	1.2.840.10008.5.1.4.1.1.88.70	Transfer Syntaxes for Received SOP Instances (see Table 23)	SCP	None
Acquisition Context SR Storage	1.2.840.10008.5.1.4.1.1.88.71	Transfer Syntaxes for Received SOP Instances (see Table 23)	SCP	None
Simplified Adult Echo SR Storage	1.2.840.10008.5.1.4.1.1.88.72	Transfer Syntaxes for Received SOP Instances (see Table 23)	SCP	None
Patient Radiation Dose SR Storage	1.2.840.10008.5.1.4.1.1.88.73	Transfer Syntaxes for Received SOP Instances (see Table 23)	SCP	None
Planned Imaging Agent Administration SR Storage	1.2.840.10008.5.1.4.1.1.88.74	Transfer Syntaxes for Received SOP Instances (see Table 23)	SCP	None
Performed Imaging Agent Administration SR Storage	1.2.840.10008.5.1.4.1.1.88.75	Transfer Syntaxes for Received SOP Instances (see Table 23)	SCP	None
Content Assessment Results Storage	1.2.840.10008.5.1.4.1.1.90.1	Transfer Syntaxes for Received SOP Instances (see Table 23)	SCP	None
Encapsulated PDF Storage	1.2.840.10008.5.1.4.1.1.104.1	Transfer Syntaxes for Received SOP Instances (see Table 23)	SCP	None
Encapsulated CDA Storage	1.2.840.10008.5.1.4.1.1.104.2	Transfer Syntaxes for Received SOP Instances (see Table 23)	SCP	None
Encapsulated STL Storage	1.2.840.10008.5.1.4.1.1.104.3	Transfer Syntaxes for Received SOP Instances (see Table 23)	SCP	None
Encapsulated OBJ Storage	1.2.840.10008.5.1.4.1.1.104.4	Transfer Syntaxes for Received SOP Instances (see Table 23)	SCP	None
Encapsulated MTL Storage	1.2.840.10008.5.1.4.1.1.104.5	Transfer Syntaxes for Received SOP Instances (see Table 23)	SCP	None
Positron Emission Tomography Image Storage	1.2.840.10008.5.1.4.1.1.128	Transfer Syntaxes for Received SOP Instances (see Table 23)	SCP	None
Legacy Converted Enhanced PET Image Storage	1.2.840.10008.5.1.4.1.1.128.1	Transfer Syntaxes for Received SOP Instances (see Table 23)	SCP	None

Standalone PET Curve Storage (Retired)	1.2.840.10008.5.1.4.1.1.129	Transfer Syntaxes for Received SOP Instances (see Table 23)	SCP	None
Enhanced PET Image Storage	1.2.840.10008.5.1.4.1.1.130	Transfer Syntaxes for Received SOP Instances (see Table 23)	SCP	None
Basic Structured Display Storage	1.2.840.10008.5.1.4.1.1.131	Transfer Syntaxes for Received SOP Instances (see Table 23)	SCP	None
CT Defined Procedure Protocol Storage	1.2.840.10008.5.1.4.1.1.200.1	Transfer Syntaxes for Received SOP Instances (see Table 23)	SCP	None
CT Performed Procedure Protocol Storage	1.2.840.10008.5.1.4.1.1.200.2	Transfer Syntaxes for Received SOP Instances (see Table 23)	SCP	None
RT Image Storage	1.2.840.10008.5.1.4.1.1.481.1	Transfer Syntaxes for Received SOP Instances (see Table 23)	SCP	None
RT Dose Storage	1.2.840.10008.5.1.4.1.1.481.2	Transfer Syntaxes for Received SOP Instances (see Table 23)	SCP	None
RT Structure Set Storage	1.2.840.10008.5.1.4.1.1.481.3	Transfer Syntaxes for Received SOP Instances (see Table 23)	SCP	None
RT Beams Treatment Record Storage	1.2.840.10008.5.1.4.1.1.481.4	Transfer Syntaxes for Received SOP Instances (see Table 23)	SCP	None
RT Plan Storage	1.2.840.10008.5.1.4.1.1.481.5	Transfer Syntaxes for Received SOP Instances (see Table 23)	SCP	None
RT Brachy Treatment Record Storage	1.2.840.10008.5.1.4.1.1.481.6	Transfer Syntaxes for Received SOP Instances (see Table 23)	SCP	None
RT Treatment Summary Record Storage	1.2.840.10008.5.1.4.1.1.481.7	Transfer Syntaxes for Received SOP Instances (see Table 23)	SCP	None
RT Ion Plan Storage	1.2.840.10008.5.1.4.1.1.481.8	Transfer Syntaxes for Received SOP Instances (see Table 23)	SCP	None
RT Ion Beams Treatment Record Storage	1.2.840.10008.5.1.4.1.1.481.9	Transfer Syntaxes for Received SOP Instances (see Table 23)	SCP	None
RT Physician Intent Storage	1.2.840.10008.5.1.4.1.1.481.10	Transfer Syntaxes for Received SOP Instances (see Table 23)	SCP	None
RT Segment Annotation Storage	1.2.840.10008.5.1.4.1.1.481.11	Transfer Syntaxes for Received SOP Instances (see Table 23)	SCP	None
RT Radiation Set Storage	1.2.840.10008.5.1.4.1.1.481.12	Transfer Syntaxes for Received SOP Instances (see Table 23)	SCP	None
C-Arm Photon-Electron Radiation Storage	1.2.840.10008.5.1.4.1.1.481.13	Transfer Syntaxes for Received SOP Instances (see Table 23)	SCP	None
Tomotherapeutic Radiation Storage	1.2.840.10008.5.1.4.1.1.481.14	Transfer Syntaxes for Received SOP Instances (see Table 23)	SCP	None
Robotic-Arm Radiation Storage	1.2.840.10008.5.1.4.1.1.481.15	Transfer Syntaxes for Received SOP Instances (see Table 23)	SCP	None
RT Radiation Record Set Storage	1.2.840.10008.5.1.4.1.1.481.16	Transfer Syntaxes for Received SOP Instances (see Table 23)	SCP	None

RT Radiation Salvage Record Storage	1.2.840.10008.5.1.4.1.1.481.17	Transfer Syntaxes for Received SOP Instances (see Table 23)	SCP	None
Tomotherapeutic Radiation Record Storage	1.2.840.10008.5.1.4.1.1.481.18	Transfer Syntaxes for Received SOP Instances (see Table 23)	SCP	None
C-Arm Photon-Electron Radiation Record Storage	1.2.840.10008.5.1.4.1.1.481.19	Transfer Syntaxes for Received SOP Instances (see Table 23)	SCP	None
Robotic Radiation Record Storage	1.2.840.10008.5.1.4.1.1.481.20	Transfer Syntaxes for Received SOP Instances (see Table 23)	SCP	None
DICOS CT Image Storage	1.2.840.10008.5.1.4.1.1.501.1	Transfer Syntaxes for Received SOP Instances (see Table 23)	SCP	None
DICOS Digital X-Ray Image Storage - For Presentation	1.2.840.10008.5.1.4.1.1.501.2.1	Transfer Syntaxes for Received SOP Instances (see Table 23)	SCP	None
DICOS Digital X-Ray Image Storage - For Processing	1.2.840.10008.5.1.4.1.1.501.2.2	Transfer Syntaxes for Received SOP Instances (see Table 23)	SCP	None
DICOS Threat Detection Report Storage	1.2.840.10008.5.1.4.1.1.501.3	Transfer Syntaxes for Received SOP Instances (see Table 23)	SCP	None
DICOS 2D AIT Storage	1.2.840.10008.5.1.4.1.1.501.4	Transfer Syntaxes for Received SOP Instances (see Table 23)	SCP	None
DICOS 3D AIT Storage	1.2.840.10008.5.1.4.1.1.501.5	Transfer Syntaxes for Received SOP Instances (see Table 23)	SCP	None
DICOS Quadrupole Resonance (QR) Storage	1.2.840.10008.5.1.4.1.1.501.6	Transfer Syntaxes for Received SOP Instances (see Table 23)	SCP	None
Eddy Current Image Storage	1.2.840.10008.5.1.4.1.1.601.1	Transfer Syntaxes for Received SOP Instances (see Table 23)	SCP	None
Eddy Current Multi-frame Image Storage	1.2.840.10008.5.1.4.1.1.601.2	Transfer Syntaxes for Received SOP Instances (see Table 23)	SCP	None
RT Beams Delivery Instruction Storage - Trial (Retired)	1.2.840.10008.5.1.4.34.1	Transfer Syntaxes for Received SOP Instances (see Table 23)	SCP	None
RT Conventional Machine Verification - Trial (Retired)	1.2.840.10008.5.1.4.34.2	Transfer Syntaxes for Received SOP Instances (see Table 23)	SCP	None
RT Ion Machine Verification - Trial (Retired)	1.2.840.10008.5.1.4.34.3	Transfer Syntaxes for Received SOP Instances (see Table 23)	SCP	None
RT Beams Delivery Instruction Storage	1.2.840.10008.5.1.4.34.7	Transfer Syntaxes for Received SOP Instances (see Table 23)	SCP	None
RT Brachy Application Setup Delivery Instruction Storage	1.2.840.10008.5.1.4.34.10	Transfer Syntaxes for Received SOP Instances (see Table 23)	SCP	None
Hanging Protocol Storage	1.2.840.10008.5.1.4.38.1	Transfer Syntaxes for Received SOP Instances (see Table 23)	SCP	None
Color Palette Storage	1.2.840.10008.5.1.4.39.1	Transfer Syntaxes for Received SOP Instances (see Table 23)	SCP	None
Generic Implant Template Storage	1.2.840.10008.5.1.4.43.1	Transfer Syntaxes for Received SOP Instances (see Table 23)	SCP	None

Implant Assembly Template Storage	1.2.840.10008.5.1.4.44.1	Transfer Syntaxes for Received SOP Instances (see Table 23)	SCP	None
Implant Template Group Storage	1.2.840.10008.5.1.4.45.1	Transfer Syntaxes for Received SOP Instances (see Table 23)	SCP	None
Private TomTec Annotation Storage	1.2.276.0.48.5.1.4.1.1.7	Transfer Syntaxes for Received SOP Instances (see Table 23)	SCP	None
Private Toshiba US Image Storage	1.2.392.200036.9116.7.8.1.1.1	Transfer Syntaxes for Received SOP Instances (see Table 23)	SCP	None
Private Fuji CR Image Storage	1.2.392.200036.9125.1.1.2	Transfer Syntaxes for Received SOP Instances (see Table 23)	SCP	None
Private GE Collage Storage	1.2.528.1.1001.5.1.1.1	Transfer Syntaxes for Received SOP Instances (see Table 23)	SCP	None
Private ERAD Practice Builder Report Text Storage	1.2.826.0.1.3680043.293.1.0.1	Transfer Syntaxes for Received SOP Instances (see Table 23)	SCP	None
Private ERAD Practice Builder Report Dictation Storage	1.2.826.0.1.3680043.293.1.0.2	Transfer Syntaxes for Received SOP Instances (see Table 23)	SCP	None
Private Philips HP Live 3D 01 Storage	1.2.840.113543.6.6.1.3.10001	Transfer Syntaxes for Received SOP Instances (see Table 23)	SCP	None
Private Philips HP Live 3D 02 Storage	1.2.840.113543.6.6.1.3.10002	Transfer Syntaxes for Received SOP Instances (see Table 23)	SCP	None
Private GE 3D Model Storage	1.2.840.113619.4.26	Transfer Syntaxes for Received SOP Instances (see Table 23)	SCP	None
Private GE PET Raw Data Storage	1.2.840.113619.4.30	Transfer Syntaxes for Received SOP Instances (see Table 23)	SCP	None
Private GE RT Plan Storage	1.2.840.113619.4.5.249	Transfer Syntaxes for Received SOP Instances (see Table 23)	SCP	None
Private PixelMed Legacy Converted Enhanced CT Image Storage	1.3.6.1.4.1.5962.301.1	Transfer Syntaxes for Received SOP Instances (see Table 23)	SCP	None
Private PixelMed Legacy Converted Enhanced MR Image Storage	1.3.6.1.4.1.5962.301.2	Transfer Syntaxes for Received SOP Instances (see Table 23)	SCP	None
Private PixelMed Legacy Converted Enhanced PET Image Storage	1.3.6.1.4.1.5962.301.3	Transfer Syntaxes for Received SOP Instances (see Table 23)	SCP	None
Private PixelMed Floating Point Image Storage	1.3.6.1.4.1.5962.301.9	Transfer Syntaxes for Received SOP Instances (see Table 23)	SCP	None
Private Siemens CSA Non Image Storage	1.3.12.2.1107.5.9.1	Transfer Syntaxes for Received SOP Instances (see Table 23)	SCP	None
Private Siemens CT MR Volume Storage	1.3.12.2.1107.5.99.3.10	Transfer Syntaxes for Received SOP Instances (see Table 23)	SCP	None
Private Siemens AX Frame Sets Storage	1.3.12.2.1107.5.99.3.11	Transfer Syntaxes for Received SOP Instances (see Table 23)	SCP	None

Private Philips Specialised XA Storage	1.3.46.670589.2.3.1.1	Transfer Syntaxes for Received SOP Instances (see Table 23)	SCP	None
Private Philips CX Image Storage	1.3.46.670589.2.4.1.1	Transfer Syntaxes for Received SOP Instances (see Table 23)	SCP	None
Private Philips 3D Presentation State Storage	1.3.46.670589.2.5.1.1	Transfer Syntaxes for Received SOP Instances (see Table 23)	SCP	None
Private Philips VRML Storage	1.3.46.670589.2.8.1.1	Transfer Syntaxes for Received SOP Instances (see Table 23)	SCP	None
Private Philips Volume Set Storage	1.3.46.670589.2.11.1.1	Transfer Syntaxes for Received SOP Instances (see Table 23)	SCP	None
Private Philips Volume Storage (Retired)	1.3.46.670589.5.0.1	Transfer Syntaxes for Received SOP Instances (see Table 23)	SCP	None
Private Philips Volume Storage	1.3.46.670589.5.0.1.1	Transfer Syntaxes for Received SOP Instances (see Table 23)	SCP	None
Private Philips 3D Object Storage (Retired)	1.3.46.670589.5.0.2	Transfer Syntaxes for Received SOP Instances (see Table 23)	SCP	None
Private Philips 3D Object Storage	1.3.46.670589.5.0.2.1	Transfer Syntaxes for Received SOP Instances (see Table 23)	SCP	None
Private Philips Surface Storage (Retired)	1.3.46.670589.5.0.3	Transfer Syntaxes for Received SOP Instances (see Table 23)	SCP	None
Private Philips Surface Storage	1.3.46.670589.5.0.3.1	Transfer Syntaxes for Received SOP Instances (see Table 23)	SCP	None
Private Philips Composite Object Storage	1.3.46.670589.5.0.4	Transfer Syntaxes for Received SOP Instances (see Table 23)	SCP	None
Private Philips MR Cardio Profile Storage	1.3.46.670589.5.0.7	Transfer Syntaxes for Received SOP Instances (see Table 23)	SCP	None
Private Philips MR Cardio Storage (Retired)	1.3.46.670589.5.0.8	Transfer Syntaxes for Received SOP Instances (see Table 23)	SCP	None
Private Philips MR Cardio Storage	1.3.46.670589.5.0.8.1	Transfer Syntaxes for Received SOP Instances (see Table 23)	SCP	None
Private Philips CT Synthetic Image Storage	1.3.46.670589.5.0.9	Transfer Syntaxes for Received SOP Instances (see Table 23)	SCP	None
Private Philips MR Synthetic Image Storage	1.3.46.670589.5.0.10	Transfer Syntaxes for Received SOP Instances (see Table 23)	SCP	None
Private Philips MR Cardio Analysis Storage (Retired)	1.3.46.670589.5.0.11	Transfer Syntaxes for Received SOP Instances (see Table 23)	SCP	None
Private Philips MR Cardio Analysis Storage	1.3.46.670589.5.0.11.1	Transfer Syntaxes for Received SOP Instances (see Table 23)	SCP	None
Private Philips CX Synthetic Image Storage	1.3.46.670589.5.0.12	Transfer Syntaxes for Received SOP Instances (see Table 23)	SCP	None
Private Philips Perfusion Storage	1.3.46.670589.5.0.13	Transfer Syntaxes for Received SOP Instances (see Table 23)	SCP	None

Private Philips Perfusion Image Storage	1.3.46.670589.5.0.14	Transfer Syntaxes for Received SOP Instances (see Table 23)	SCP	None
Private Philips X-Ray MF Storage	1.3.46.670589.7.8.1618510091	Transfer Syntaxes for Received SOP Instances (see Table 23)	SCP	None
Private Philips Live Run Storage	1.3.46.670589.7.8.1618510092	Transfer Syntaxes for Received SOP Instances (see Table 23)	SCP	None
Private Philips Run Storage	1.3.46.670589.7.8.16185100129	Transfer Syntaxes for Received SOP Instances (see Table 23)	SCP	None
Private Philips Reconstruction Storage	1.3.46.670589.7.8.16185100130	Transfer Syntaxes for Received SOP Instances (see Table 23)	SCP	None
Private Philips MR Spectrum Storage	1.3.46.670589.11.0.0.12.1	Transfer Syntaxes for Received SOP Instances (see Table 23)	SCP	None
Private Philips MR Series Data Storage	1.3.46.670589.11.0.0.12.2	Transfer Syntaxes for Received SOP Instances (see Table 23)	SCP	None
Private Philips MR Color Image Storage	1.3.46.670589.11.0.0.12.3	Transfer Syntaxes for Received SOP Instances (see Table 23)	SCP	None
Private Philips MR Examcard Storage	1.3.46.670589.11.0.0.12.4	Transfer Syntaxes for Received SOP Instances (see Table 23)	SCP	None
Private PMOD Multi-frame Image Storage	2.16.840.1.114033.5.1.4.1.1.130	Transfer Syntaxes for Received SOP Instances (see Table 23)	SCP	None

Table 23. Accepted Transfer Syntaxes for Received SOP Instances

Name	UID
Implicit VR Little Endian [1]	1.2.840.10008.1.2
Explicit VR Little Endian	1.2.840.10008.1.2.1
Deflated Explicit VR Little Endian	1.2.840.10008.1.2.1.99
Explicit VR Big Endian	1.2.840.10008.1.2.2
JPEG Baseline (Process 1)	1.2.840.10008.1.2.4.50
JPEG Extended (Process 2 & 4)	1.2.840.10008.1.2.4.51
JPEG Extended (Process 3 & 5) (Retired)	1.2.840.10008.1.2.4.52
JPEG Spectral Selection, Non-Hierarchical (Process 6 & 8) (Retired)	1.2.840.10008.1.2.4.53
JPEG Spectral Selection, Non-Hierarchical (Process 7 & 9) (Retired)	1.2.840.10008.1.2.4.54
JPEG Full Progression, Non-Hierarchical (Process 10 & 12) (Retired)	1.2.840.10008.1.2.4.55
JPEG Full Progression, Non-Hierarchical (Process 11 & 13) (Retired)	1.2.840.10008.1.2.4.56
JPEG Lossless, Non–Hierarchical (Process 14)	1.2.840.10008.1.2.4.57
JPEG Lossless, Non-Hierarchical (Process 15) (Retired)	1.2.840.10008.1.2.4.58
JPEG Extended, Hierarchical (Process 16 & 18) (Retired)	1.2.840.10008.1.2.4.59
JPEG Extended, Hierarchical (Process 17 & 19) (Retired)	1.2.840.10008.1.2.4.60

JPEG Spectral Selection, Hierarchical (Process 20 & 22) (Retired)	1.2.840.10008.1.2.4.61
JPEG Spectral Selection, Hierarchical (Process 21 & 23) (Retired)	1.2.840.10008.1.2.4.62
JPEG Full Progression, Hierarchical (Process 24 & 26) (Retired)	1.2.840.10008.1.2.4.63
JPEG Full Progression, Hierarchical (Process 25 & 27) (Retired)	1.2.840.10008.1.2.4.64
JPEG Lossless, Hierarchical (Process 28) (Retired)	1.2.840.10008.1.2.4.65
JPEG Lossless, Hierarchical (Process 29) (Retired)	1.2.840.10008.1.2.4.66
JPEG Lossless, Non–Hierarchical, First-Order Prediction (Process 14 [Selection Value 1])	1.2.840.10008.1.2.4.70
JPEG-LS Lossless Image Compression	1.2.840.10008.1.2.4.80
JPEG-LS Lossy (Near–Lossless) Image Compression	1.2.840.10008.1.2.4.81
JPEG 2000 Image Compression (Lossless Only)	1.2.840.10008.1.2.4.90
JPEG 2000 Image Compression	1.2.840.10008.1.2.4.91
JPEG 2000 Part 2 Multi-component Image Compression (Lossless Only)	1.2.840.10008.1.2.4.92
JPEG 2000 Part 2 Multi-component Image Compression	1.2.840.10008.1.2.4.93
JPIP Referenced	1.2.840.10008.1.2.4.94
JPIP Referenced Deflate	1.2.840.10008.1.2.4.95
MPEG–2 Main Profile @ Main Level	1.2.840.10008.1.2.4.100
MPEG–2 Main Profile @ High Level	1.2.840.10008.1.2.4.101
MPEG–4 AVC/H.264 High Profile / Level 4.1	1.2.840.10008.1.2.4.102
MPEG–4 AVC/H.264 BD–compatible High Profile / Level 4.1	1.2.840.10008.1.2.4.103
MPEG–4 AVC/H.264 High Profile / Level 4.2 For 2D Video	1.2.840.10008.1.2.4.104
MPEG–4 AVC/H.264 High Profile / Level 4.2 For 3D Video	1.2.840.10008.1.2.4.105
MPEG–4 AVC/H.264 Stereo High Profile / Level 4.2	1.2.840.10008.1.2.4.106
HEVC/H.265 Main Profile / Level 5.1	1.2.840.10008.1.2.4.107
HEVC/H.265 Main 10 Profile / Level 5.1	1.2.840.10008.1.2.4.108
RLE Lossless	1.2.840.10008.1.2.5
RFC 2557 MIME encapsulation (Retired)	1.2.840.10008.1.2.6.1
XML Encoding (Retired)	1.2.840.10008.1.2.6.2
SMPTE ST 2110-20 Uncompressed Progressive Active Video	1.2.840.10008.1.2.7.1
SMPTE ST 2110-20 Uncompressed Interlaced Active Video	1.2.840.10008.1.2.7.2
SMPTE ST 2110-30 PCM Digital Audio	1.2.840.10008.1.2.7.3

There is no validation for combinations of SOP Class and Transfer Syntax, that is, whether they conform to corresponding IODs where restrictions might apply. The Storage Server will accept and store any known Classes and Syntaxes.

4.2.4.3.1.3 SOP Specific Conformance for Storage SOP Classes

The associated Activity with the Storage Server is the storage of medical DICOM data initiated over the network by the SCU. The Storage Server AE will indicate a failure if it is unable to store any of the incoming instances.

Table 24. Storage Server C-STORE Response Statuses

Service Status	Further Meaning	Error Code	Behavior
Success	Success	0000	The Composite SOP Instance was successfully stored in the system repository.
Error	Processing Failure	0110	This status is returned due to internal errors such as a processing failure response from a filesystem operation. The appropriate Status will be sent in the C-STORE Response. Error indication message is output to logs if these are enabled.

4.3 Network Interfaces

DICOM Upper Layer over TCP/IP is supported.

4.3.1 Physical Network Interface

VideoStation is indifferent to the physical medium over which TCP/IP executes. It inherits the TCP/IP stack from the operating system or, in case of Storage Client, from Java Runtime Environment.

4.3.2 Additional Protocols

No additional protocols are supported.

4.3.3 IPv4 and IPv6 Support

Only IPv4 is explicitly supported and was tested.

4.4 Configuration

4.4.1 AE Title/Presentation Address Mapping

The remote AE Titles and TCP ports are configurable in application settings.

4.4.1.1 Local AE Titles

A single AE Title is shared among all local AEs and is configurable in application settings (NETWORK>LOCAL). Clients will use it as the Calling AE Title.

Table 25. AE Title Configuration Table

Application Entity	Default AE Title	Default TCP/IP Port
Verification Client	SPACS	—
Storage Client		
Modality Worklist Client		
Storage Server		104

A client chooses any free TCP/IP port offered by the Windows Sockets layer. The IP address is managed by the operating system and can be configured there.
The Storage Server can also be configured to bind to a specific IP address instead of 127.0.0.1.

4.4.1.2 Remote AE Titles

AETs for Storage SCP and MWL SCP are configurable. It's up to the user to ensure that Remote AEs accept the configured local title (Calling AE Title).

4.4.2 Parameters

VideoStation configuration parameters relevant to DICOM communication are as follows.

Table 26. Configuration Parameter Table

Parameter	Config–urable?	Default Value
General Parameters		
Proposed Called AETs	Yes	Assigned by user
Proposed Calling AET	Yes	SPACS
Time–out waiting for TCP/IP connect	No	10s
Maximum PDU size the AE can receive	No	16384
Maximum PDU size the AE can send	No	16384
Support for the Basic TLS Secure Transport Connection Profile	No	Off
Time-out waiting for a DIMSE–RSP	No	0s
Time-out waiting for a DIMSE-RQ	No	0s
Time-out waiting for receiving A-ASSOCIATE-AC	No	10s
Time-out waiting for receiving A-RELEASE-RP	No	50ms
Time delay for Socket close after sending A-ABORT	No	0s
Verification Client		
Client execution time (VideoStation application limits client)	No	10s
Storage Client AE		
Pack Command and Data PDVs in one PDU	No	False
Client execution time to process one study (VideoStation application limits client)	No	7200s
Modality Worklist Client		
Client execution time to receive data (VideoStation application limits client)	No	10s
Storage Server AE		
Storage location for created DICOM files	No	*InstallationDirectory*\DICOM

5 Media Interchange

VideoStation does not support Media Interchange.

6 Support of Extended Character Sets

VideoStation allows to set and change character set to converting SOP instance to DICOM format in general settings. Separate options in NETWORK WORKLIST settings, allows to set and change Modality Worklist result character set.
Recommended to set correct and constant specific character set for Storage SCP.

Supported character set:

- <empty> - Default repertoire (no specific character set will be added),
- ISO_IR 100 - Latin alphabet No. 1,
- ISO_IR 101 - Latin alphabet No. 2,
- ISO_IR 109 - Latin alphabet No. 3,
- ISO_IR 110 - Latin alphabet No. 4,
- ISO_IR 148 - Latin alphabet No. 5,
- ISO_IR 144 - Cyrillic,
- ISO_IR 127 - Arabic,
- ISO_IR 126 - Greek,
- ISO_IR 138 - Hebrew,
- ISO_IR 13 - Japanese,
- ISO_IR 166 - Thai,
- ISO 2022 IR 6", Default repertoire,
- ISO 2022 IR 100 - Latin alphabet No. 1,
- ISO 2022 IR 101 - Latin alphabet No. 2,
- ISO 2022 IR 109 - Latin alphabet No. 3,
- ISO 2022 IR 110 - Latin alphabet No. 4,
- ISO 2022 IR 148 - Latin alphabet No. 5,
- ISO 2022 IR 144 - Cyrillic,
- ISO 2022 IR 127 - Arabic,
- ISO 2022 IR 126 - Greek,
- ISO 2022 IR 138 - Hebrew,
- ISO 2022 IR 13 - Japanese,
- ISO 2022 IR 166 - Thai,
- ISO 2022 IR 87 - Japanese,
- ISO 2022 IR 159 - Japanese,
- ISO 2022 IR 149 - Korean,
- ISO 2022 IR 58 - Simplified Chinese,
- GB18030 - GB18030,
- ISO_IR 192 - Unicode in UTF-8

7 Security

The DICOM capabilities of VideoStation do not support any specific security measures.
It is assumed that the Software is used within a secured environment. It is assumed that a secured environment includes at a minimum:

- firewall or router protections to ensure that the Software only has network access to approved external hosts and services;
- appropriate secure network channels (e.g. such as a Virtual Private Network) for any communication with external hosts and services outside the locally secured environment.

Other network security procedures such as automated intrusion detection may be appropriate in some environments. Additional security features may be established by the local security policy and are beyond the scope of this conformance statement.

8 Annexes

8.1 IOD Contents

Abbreviations used for presence of values (PoV):

VNAP
Value Not Always Present (attribute has zero length if no value is present) – Applicable for Type 2, 2C.

ANAP
Attribute is not always present – Applicable for Type 3

ALWAYS
Attribute is always present with a value – Applicable for Type 1

EMPTY
Attribute is sent without a value – Applicable for Type 2

Abbreviations used for sources of data:

USER
Attribute value is generated from user input.

AUTO
Attribute value is generated automatically.

MWL
Attribute value is the same as the value received using a DICOM service such as Modality Worklist, Modality Performed Procedure Step, etc.

CONFIG
Attribute value is a configurable parameter.

8.1.1 File Meta Information

Table 27. DICOM File Meta Information

Tag	Type	VR	Name	Description	PoV	Source
—	1	—	File Preamble	A fixed 128-byte field available for Application Profile or implementation specified use. If not used by an Application Profile or a specific implementation all bytes shall be set to 00H.	ALWAYS	AUTO
—	1	—	DICOM Prefix	Four bytes containing the character string "DICM". This Prefix is intended to be used to recognize that this File is or not a DICOM File.	ALWAYS	AUTO
(0002,0000)	1	UL	File Meta Information Group Length	Number of bytes following this File Meta Element (end of the Value field) up to and including the last File Meta Element of the Group 2 File Meta Information	ALWAYS	AUTO
(0002,0001)	1	OB	File Meta Information Version20013	This is a two bytes field where each bit identifies a version of this File Meta Information header. In version 1 the first byte value is 00H and the second value byte value is 01H. *Always "00\01"*	ALWAYS	AUTO

(0002,0002)	1	UI	Media Storage SOP Class UID	Uniquely identifies the SOP Class associated with the Data Set. *Always "1.2.840.10008.5.1.4.1.1.7"*	ALWAYS	AUTO
(0002,0003)	1	UI	Media Storage SOP Instance UID	Uniquely identifies the SOP Instance associated with the Data Set placed in the file and following the File Meta Information. *Duplicates (0008,0018) — see Table 36*	ALWAYS	AUTO
(0002,0010)	1	UI	Transfer Syntax UID	Uniquely identifies the Transfer Syntax used to encode the following Data Set. This Transfer Syntax does not apply to the File Meta Information. *Constant value that depends on instance type and configuration:* *for snapshots — always "1.2.840.10008.1.2.4.50"* *for videos — one of "1.2.840.10008.1.2.4.100", "1.2.840.10008.1.2.4.101", "1.2.840.10008.1.2.4.102", "1.2.840.10008.1.2.4.103" as per configuration*	ALWAYS	AUTO, CONFIG
(0002,0012)	1	UI	Implementation Class UID	Uniquely identifies the implementation that wrote this file and its content. It provides an unambiguous identification of the type of implementation that last wrote the file in the event of interchange problems. It follows the same policies as defined by PS3.7 (association negotiation). *Always "1.3.6.1.4.1.44316.4"*	ALWAYS	AUTO
(0002,0013)	3	SH	Implementation Version Name	Identifies a version for an Implementation Class UID (0002,0012) using up to 16 characters of the repertoire identified in Section 8.5. It follows the same policies as defined by PS3.7 (association negotiation). *Always "MDSTATION"*	ALWAYS	AUTO

8.1.2 Created SOP Instances

8.1.2.1 Secondary Capture IOD

Table 28. Use of Modules

IE	Module	Usage
Patient		
	Patient	MANDATORY
	Clinical Trial Subject	OPTIONAL

Study		
	General Study	MANDATORY
	Patient Study	OPTIONAL
	Clinical Trial Study	OPTIONAL
Series		
	General Series	MANDATORY
	Clinical Trial Series	OPTIONAL
Equipment		
	General Equipment	OPTIONAL
	SC Equipment	MANDATORY
Image		
	General Image	MANDATORY
	General Reference	OPTIONAL
	Image Pixel	MANDATORY
	Device	OPTIONAL
	Specimen	OPTIONAL
	SC Image	MANDATORY
	Overlay Plane	OPTIONAL
	Modality LUT	OPTIONAL
	VOI LUT	OPTIONAL
	ICC Profile	OPTIONAL
	SOP Common	MANDATORY
	Common Instance Reference	OPTIONAL

Table 29. Secondary Capture IOD - Module "Patient"

Tag	Type	VR	Name	Description	PoV	Source
(0010,0010)	2	PN	Patient's Name	Patient's full name.	ALWAYS	MWL, USER
(0010,0020)	2	LO	Patient ID	Primary hospital identification number or code for the patient.	ALWAYS	MWL, USER
(0010,0030)	2	DA	Patient's Birth Date	Birth date of the patient.	VNAP	MWL, USER
(0010,0040)	2	CS	Patient's Sex	Sex of the named patient. Enumerated Values: M = male F = female	VNAP	MWL, USER
0010,0021)	3	LO	Issuer of Patient ID	Identifier of the Assigning Authority (system, organization, agency, or department) that issued the Patient ID.	ANAP	MWL,

(0008,1120)	3	SQ	Referenced Patient Sequence	A sequence that provides reference to a Patient SOP Class/Instance pair. Only a single Item is permitted in this Sequence.	ANAP	MWL,
>(0008,1150)	1	UI	Referenced SOP Class UID	Uniquely identifies the referenced SOP Class.	ALWAYS	MWL,
>(0008,1155)	1	UI	Referenced SOP Instance UID	Uniquely identifies the referenced SOP Instance.	ALWAYS	MWL,

Table 30. Secondary Capture IOD - Module "General Study"

Tag	Type	VR	Name	Description	PoV	Source
(0020,000D)	1	UI	Study Instance UID	Unique identifier for the Study. *Unscheduled case: "1.3.6.1.4.1.44316.4." extended by software version number, date and time information, "1" as study level attribute, time in milliseconds and additional randomness.* *Scheduled case: copied from MWL (0020,000d).*	ALWAYS	MWL, AUTO
(0008,0020)	2	DA	Study Date	Date the Study started. Date, when procedure step was started.	ALWAYS	MWL, AUTO
(0008,0030)	2	TM	Study Time	Time the Study started. Time, when procedure step was started.	ALWAYS	MWL, AUTO
(0008,0090)	2	PN	Referring Physician's Name	Name of the patient's referring physician. *Always empty.* *Scheduled case: copied from MWL (0008,0090).*	VNAP	MWL, AUTO
(0020,0010)	2	SH	Study ID	User or equipment generated Study identifier. *Timestamp in format YYYYMMDDHHIISSss* *Scheduled case: copied from MWL (0040,1001)*	VNAP	MWL, AUTO
(0008,1030)	3	LO	Study Description	Description or classification of the Study (component) performed. *Scheduled case: copied from MWL (0032,1060)*	ANAP	MWL, USER
(0008,0050)	2	SH	Accession Number	A RIS–generated number that identifies the order for the Study. *Timestamp in format YYYYMMDDHHIISSss* *Scheduled case: copied from MWL (0008,0050)*	ANAP	MWL, AUTO
(0008,1032)	3	SQ	Procedure Code Sequence	A Sequence that conveys the type of procedure performed. One or more Items are permitted in this Sequence.	ANAP	MWL
>(0008,0100)	1C	SH	Code Value	The identifier of the Coded Entry.	ANAP	MWL

>(0008,0102)	1C	SH	Coding Scheme Designator	The identifier of the coding scheme in which the Coded Entry is defined.	ANAP	MWL
>(0008,0103)	1C	SH	Coding Scheme Version	An identifier of the version of the coding scheme if necessary, to resolve ambiguity.	ANAP	MWL
>(0008,0104)	1	LO	Code Meaning	Text that conveys the meaning of the Coded Entry.	ALWAYS	MWL
(0008,1110)	3	SQ	Referenced Study Sequence	A Sequence that provides reference to a Study SOP Class/Instance pair. One or more Items are permitted in this Sequence.	ANAP	MWL
>(0008,1150)	1	UI	Referenced SOP Class UID	Uniquely identifies the referenced SOP Class.	ALWAYS	MWL
>(0008,1155)	1	UI	Referenced SOP Instance UID	Uniquely identifies the referenced SOP Instance.	ALWAYS	MWL

Table 31. Secondary Capture IOD - Module "Patient Study"

Tag	Type	VR	Name	Description	PoV	Source
(0008,1080)	3	LO	Admitting Diagnoses Description	Description of the admitting diagnosis (diagnoses)	ANAP	MWL
(0010,1030)	3	DS	Patient's Weight	Weight of the Patient, in kilograms.	ANAP	MWL
(0010,2000)	3	LO	Medical Alerts	Conditions to which medical staff should be alerted (e.g., contagious condition, drug allergies, etc.)	ANAP	MWL
(0010,2110)	3	LO	Allergies	Description of prior reaction to contrast agents, or other patient allergies or adverse reactions.	ANAP	MWL
(0010,21C0)	3	US	Pregnancy Status	Describes pregnancy state of Patient. Enumerated Values: 0001 not pregnant 0002 possibly pregnant 0003 definitely pregnant 0004 unknown *If value from MWL is one of the numbers: 1, 2, 3, 4 – will add 000 to the beginning to form correct value.*	ANAP	MWL
(0038,0500)	3	LO	Patient State	Description of Patient state (comatose, disoriented, vision impaired, etc.)	ANAP	MWL
(0010,21B0)	3	LT	Additional Patient History	Additional information about the Patient's medical history.	ANAP	MWL
(0038,0010)	3	LO	Admission ID	Identifier of the Visit as assigned by the healthcare provider	ANAP	MWL

Table 32. Secondary Capture IOD - Module "General Series"

Tag	Type	VR	Name	Description	PoV	Source
(0008,0060)	1	CS	Modality	Source equipment that produced the Secondary Capture Series.	ALWAYS	MWL, CONFIG

				"OT" by default from settings *Scheduled case: copied from MWL* (0040,0100)>(0008,0060)		
(0020,000E)	1	UI	Series Instance UID	Unique identifier of the Series. *"1.3.6.1.4.1.44316.4." extended by software version number, date and time information, "2" as series level attribute, series number and additional randomness.*	ALWAYS	AUTO
(0020,0011)	2	IS	Series Number	A number that identifies this Series.	ALWAYS	AUTO
(0020,0060)	2C	CS	Laterality	Laterality of (paired) body part examined. Required if the body part examined is a paired structure and Image Laterality (0020,0062) or Frame Laterality (0020,9072) or Measurement Laterality (0024,0113) are not sent. Enumerated Values: R right L left *Always empty. It is generally unknown which body part will be imaged. The user interface also doesn't provide means to specify that.*	EMPTY	AUTO
(0008,0021)	3	DA	Series Date	Date the Series started.	ALWAYS	AUTO
(0008,0031)	3	TM	Series Time	Time the Series started.	ALWAYS	AUTO
(0008,103E)	3	LO	Series Description	Description of the Series.	ALWAYS	AUTO
(0040,0275)	3	SQ	Request Attributes Sequence	Sequence that contains Attributes from the Imaging Service Request. One or more Items are permitted in this Sequence.	ANAP	MWL
>(0040,1001)	1C	SH	Requested Procedure ID	Identifier that identifies the Requested Procedure in the Imaging Service Request. Required if procedure was scheduled. May be present otherwise. *Scheduled case: copied from MWL (0040,1001)*	ANAP	MWL
>(0032,1060)	3	LO	Requested Procedure Description	Institution-generated administrative description or classification of Requested Procedure. *Scheduled case: copied from MWL* (0032,1060)	ANAP	MWL
>(0040,0009)	1C	SH	Scheduled Procedure Step ID	Identifier that identifies the Scheduled Procedure Step. Required if procedure was scheduled.	ANAP	MWL

				Scheduled case: copied from MWL (0032,1064)>(0040,0009)		
>(0040,0007)	3	LO	Scheduled Procedure Step Description	Institution-generated description or classification of the Scheduled Procedure Step to be performed. *Scheduled case: copied from MWL (0032,1064)>(0040,0007)*	ANAP	MWL
>(0040,0008)	3	SQ	Scheduled Protocol Code Sequence	Sequence describing the Scheduled Protocol following a specific coding scheme. One or more Items are permitted in this Sequence. *Scheduled case: copied from MWL (0040,0100)>(0040,0008)*	ANAP	MWL
>>(0008,0100)	1C	SH	Code Value	The identifier of the Coded Entry. *Scheduled case: copied from MWL (0040,0100)>(0040,0008)>(0008,0100)*	ANAP	MWL
>>(0008,0102)	1C	SH	Coding Scheme Designator	The identifier of the coding scheme in which the Coded Entry is defined. *Scheduled case: copied from MWL* (0040,0100)>(0040,0008)>(0008,0102)	ANAP	MWL
>>(0008,0103)	1C	SH	Coding Scheme Version	An identifier of the version of the coding scheme if necessary to resolve ambiguity. *Scheduled case: copied from MWL (0040,0100)>(0040,0008)>(0008,0103)*	ANAP	MWL
>>(0008,0104)	1	LO	Code Meaning	Text that conveys the meaning of the Coded Entry. *Scheduled case: copied from MWL (0040,0100)>(0040,0008)>(0008,0104)*	ALWAYS	MWL
(0018,1030)	3	LO	Protocol Name	User-defined description of the conditions under which the Series was performed. *Scheduled case: copied from MWL (0032,1060)*	ANAP	MWL

Table 33. Secondary Capture IOD - Module "General Equipment"

Tag	Type	VR	Name	Description	PoV	Source
(0008,0070)	2	LO	Manufacturer	Manufacturer of the equipment that produced the composite instances	EMPTY	AUTO
(0008,1010)	3	SH	Station Name	User defined name identifying the machine that produced the Composite Instances. *From configuration: Storage Server AE Title (network settings local PACS AE Title)*	ALWAYS	CONFIG
(0018,1020)	3	LO	Software Versions	Manufacturer's designation of software version of the equipment that produced the Composite Instances.	ALWAYS	AUTO

				Software version number: X.X.X		

Table 34. Secondary Capture IOD - Module "SC Equipment"

Tag	Type	VR	Name	Description	PoV	Source
(0008,0064)	1	CS	Conversion Type	Describes the kind of image conversion. Defined Terms: DV Digitized Video DI Digital Interface DF Digitized Film WSD Workstation SD Scanned Document SI Scanned Image DRW Drawing SYN Synthetic Image *Always "SI" for snapshot and "DV" for video.*	ALWAYS	AUTO
(0018,1016)	3	LO	Secondary Capture Device Manufacturer	Manufacturer of the Secondary Capture Device *Always "MedDream".*	ALWAYS	AUTO
(0018,1018)	3	LO	Secondary Capture Device Manufacturer's Model Name	Manufacturer's model number of the Secondary Capture Device *Always "MedDream VideoStation".*	ALWAYS	AUTO

Table 35. Secondary Capture IOD - Module "General Image"

Tag	Type	VR	Name	Description	PoV	Source
(0008,0008)	3	CS	Image Type	Image identification characteristics. See C.8.17.2.1.4 for specialization. Multi-value attribute containing 4 values: 1) Pixel Data Characteristics "ORIGINAL" for original acquired images. *Always "ORIGINAL" for video.* 2) Patient Examination Characteristics *Always "PRIMARY" for video.* 3) Modality Specific Characteristics *Always empty.* 4) Implementation specific identifiers *Always empty.* *For snapshots this entire attribute is not present.*	ANAP	AUTO
(0008,0023)	2C	DA	Content Date	The date the image pixel data creation started.	ALWAYS	AUTO

				Required if image is part of a Series in which the images are temporally related. May be present otherwise.		
(0008,0033)	2C	TM	Content Time	The time the image pixel data creation started. Required if image is part of a Series in which the images are temporally related. May be present otherwise.	ALWAYS	AUTO
(0020,0013)	2	IS	Instance Number	A number that identifies this image.	ALWAYS	AUTO
(0020,0020)	2C		Patient Orientation	Patient direction of the rows and columns of the image. Required if image does not require Image Orientation (Patient) (0020,0037) and Image Position (Patient) (0020,0032). May be present otherwise. See Section C.7.6.1.1.1 for further explanation. NOTE: IODs may have attributes other than Patient Orientation, Image Orientation, or Image Position (Patient) to describe orientation in which case this attribute will be zero length. *Always empty because in many scenarios (for example, endoscopy) the orientation is variable*	EMPTY	AUTO
(0028,2110)	1	CS	Lossy Image Compression	Specifies whether an Image has undergone lossy compression. Enumerated Values: 00 = Image has NOT been subjected to lossy compression. 01 = Image has been subjected to lossy compression. See C.7.6.1.1.5 “01” if image is compressed “00” otherwise *Always “01”*	ALWAYS	AUTO

Table 36. Secondary Capture IOD - Module "Image Pixel"

Tag	Type	VR	Name	Description	PoV	Source
(0028,0002)	1	US	Samples Per Pixel	Number of samples (planes) in this image. See Section C.7.6.3.1.1 for further explanation. *Always "3"*	ALWAYS	AUTO
(0028,0004)	1	CS	Photometric Interpretation	Specifies the intended interpretation of the pixel data. See Section C.7.6.3.1.2 for further explanation. *Always "YBR_PARTIAL_420" for videos, "YBR_FULL_422" for snapshots*	ALWAYS	AUTO
(0028,0006)	1C	US	Planar Configuration	Indicates whether the pixel data are sent color-by-plane or color-by-pixel. Required if Samples per Pixel (0028,0002) has a value greater than 1. Enumerated value shall be 0 (color-by-pixel). *Always “0”*	ALWAYS	AUTO
(0028,0010)	1	US	Rows	Number of rows in the image.	ALWAYS	AUTO

(0028,0011)	1	US	Columns	Number of columns in the image	ALWAYS	AUTO
(0028,0100)	1	US	Bits Allocated	Number of bits allocated for each pixel sample. Each sample shall have the same number of bits allocated. See PS 3.5 for further explanation. *Always "8"*	ALWAYS	AUTO
(0028,0101)	1	US	Bits Stored	Number of bits stored for each pixel sample. Each sample shall have the same number of bits stored. See PS 3.5 for further explanation. *Always "8"*	ALWAYS	AUTO
(0028,0102)	1	US	High Bit	Most significant bit for pixel sample data. Each sample shall have the same high bit. See PS 3.5 for further explanation. *Always "7"*	ALWAYS	AUTO
(0028,0103)	1	US	Pixel Representation	Data representation of the pixel samples. Each sample shall have the same pixel representation. Enumerated Values: 0000 = unsigned integer 0001 = 2's complement *Always "0"*	ALWAYS	AUTO
(7FE0,0010)	1C	OB	Pixel Data	A data stream of the pixel samples that comprise the Image. See C.7.6.3.1.4 for further explanation. Required if Pixel Data Provider URL (0028,7FE0) is not present.	ALWAYS	AUTO

Table 37. Secondary Capture IOD - Module "SOP Common"

Tag	Type	VR	Name	Description	PoV	Source
(0008,0016)	1	UI	SOP Class UID	Uniquely identifies the SOP Class. See C.12.1.1.1 for further explanation. See also PS 3.4. *Always "1.2.840.10008.5.1.4.1.1.7".*	ALWAYS	AUTO
(0008,0018)	1	UI	SOP Instance UID	Uniquely identifies the SOP Instance. See C.12.1.1.1for further explanation. See also PS 3.4. *"1.3.6.1.4.1.44316.4." extended by software version number, date and time information, "3" as instance level attribute, instance number from all series and additional randomness.*	ALWAYS	AUTO
(0008,0005)	1C	CS	Specific Character Set	Character Set that expands or replaces the Basic Graphic Set. Required if an expanded or replacement character set is used. See C.12.1.1.2 for Defined Terms. *Software general settings one of options: "ISO_IR 100", "ISO_IR 144", "ISO_IR 192"*	ALWAYS	CONFIG

(0008,0012)	3	DA	Instance Creation Date	Date the SOP Instance was created. This is the date that the SOP Instance UID was assigned, and does not change during subsequent coercion of the instance.	ALWAYS	AUTO
(0008,0013)	3	TM	Instance Creation Time	Time the SOP Instance was created. This is the date that the SOP Instance UID was assigned, and does not change during subsequent coercion of the instance.	ALWAYS	AUTO

8.1.3 Usage of Attributes from Received IODs

The usage of attributes of Modality Worklist IODs is described in chapter 4.2.3.3.1 Activity – Query Modality Worklist.

8.1.4 Attribute Mapping

The following attributes will be mapped from Modality Worklist to created SOP Instances:

Table 38. Attribute Mapping

Attribute	Instance IOD		MWL	
Exist	(0008,0050)	Accession Number	(0008,0050)	Accession Number
Exist	(0008,0090)	Referring Physician Name	(0008,0090)	Referring Physician Name
New	(0008,1080)	Admitting Diagnoses Description	(0008,1080)	Admitting Diagnoses Description
New	(0008,1110)	Referenced Study Sequence	(0008,1110)	Referenced Study Sequence
New	>(0008,1150)	Referenced SOP Class UID	>(0008,1150)	Referenced SOP Class UID
New	>(0008,1155)	Referenced SOP Instance UID	>(0008,1155)	Referenced SOP Instance UID
New	(0008,1120)	Referenced Patient Sequence	(0008,1120)	Referenced Patient Sequence
New	>(0008,1150)	Referenced SOP Class UID	>(0008,1150)	Referenced SOP Class UID
New	>(0008,1155)	Referenced SOP Instance UID	>(0008,1155)	Referenced SOP Instance UID
Exist	(0010,0010)	Patient's Name	(0010,0010)	Patient's Name
Exist	(0010,0020)	Patient ID	(0010,0020)	Patient ID
New	(0010,0021)	Issuer of Patient ID	(0010,0021)	Issuer of Patient ID
Exist	(0010,0030)	Patient's Birth Date	(0010,0030)	Patient's Birth Date
Exist	(0010,0040)	Patient's Sex	(0010,0040)	Patient's Sex
New	(0010,1030)	Patient's Weight	(0010,1030)	Patient's Weight
New	(0010,2000)	Medical Alerts	(0010,2000)	Medical Alerts
New	(0010,2110)	Allergies	(0010,2110)	Allergies
New	(0010,21b0)	Additional Patient History	(0010,21b0)	Additional Patient History
New	(0010,21c0)	Pregnancy Status	(0010,21c0)	Pregnancy Status
Exist	(0020,000D)	Study Instance UID	(0020,000D)	Study Instance UID
Exist	(0008,1030)	Study Description	(0032,1060)	Requested Procedure Description
New	(0018,1030)	Protocol Name	(0032,1060)	Requested Procedure Description

New	(0040,0275)	Request Attributes Sequence		
New	>(0040,1001)	Requested Procedure ID	(0040,1001)	Requested Procedure ID
New	>(0032,1060)	Requested Procedure Description	(0032,1060)	Requested Procedure Description
New	>(0040,0009)	Scheduled Procedure Step ID	(0032,1064)>(0040,0009)	Scheduled Procedure Step Sequence>Scheduled Procedure Step ID
New	>(0040,0007)	Scheduled Procedure Step Description	(0032,1064)>(0040,0007)	Scheduled Procedure Step Sequence>Scheduled Procedure Step Description
New	>(0040,0008)	Scheduled Protocol Code Sequence	(0040,0100)>(0040,0008)	Scheduled Procedure Step Sequence>Scheduled Protocol Code Sequence
New	>>(0008,0100)	Code Value	>>(0008,0100)	Code Value
New	>>(0008,0102)	Coding Scheme Designator	>>(0008,0102)	Coding Scheme Designator
New	>>(0008,0103)	Coding Scheme Version	>>(0008,0103)	Coding Scheme Version
New	>>(0008,0104)	Code Meaning	>>(0008,0104)	Code Meaning
New	(0008,1032)	Procedure Code Sequence	(0032,1064)	Requested Procedure Code Sequence
New	>(0008,0100)	Code Value	>(0008,0100)	Code Value
New	>(0008,0102)	Coding Scheme Designator	>(0008,0102)	Coding Scheme Designator
New	>(0008,0103)	Coding Scheme Version	>(0008,0103)	Coding Scheme Version
New	>(0008,0104)	Code Meaning	>(0008,0104)	Code Meaning
New	(0038,0010)	Admission ID	(0038,0010)	Admission ID
New	(0038,0500)	Patient State	(0038,0500)	Patient State
Exist	(0008,0060)	Modality	(0040,0100)>(0008,0060)	Scheduled Procedure Step Sequence>Modality
Exist	(0020,0010)	Study ID	(0040,1001)	Requested Procedure ID

New – indicates, that field will be added as new from MWL.
Exist – attribute will be added even MWL do not exist. If MWL has attributes – will be added.

8.1.5 Coerced/Modified Fields

Attributes in Table 37, can be modified (except study UID) manually after importing from MWL. After modification, SOP instance will lose "New" MWL attributes, but updated "Exist" attributes will remain (study UID will be regenerated to unlink study from MWL).

8.2 Data Dictionary of Private Attributes

VideoStation does not define any private attributes.

8.3 Coded Terminology and Templates

VideoStation does not use any custom coded terminology.

8.4 Greyscale Image Consistency

Not applicable.

8.5 Standard Extended / Specialized/ Private SOP Classes

VideoStation does not use any standard extensions.

8.6 Private Transfer Syntaxes

No Private Transfer Syntax is supported.