MedDream UAB
K. Petrausko St. 26,
LT 51423, Kaunas, Lithuania
info@meddream.com
www.meddream.com

MedDream version 8.8.1

DICOM Conformance Statement

MedDream SendToPACS functionalities

v.3.4.0

Document version: 1
Date: 2026 02 26

1 Conformance Statement Overview

SendToPACS work as an image acquisition modality and as simple SCU. Its DICOM functionality allows to query the modality worklist and query/retrieve information. It supports the following network services:

Table 1. Network Services

Networking SOP Classes	User of Service (SCU)	Provider of Service (SCP)
Transfer		
Computed Radiography Image Storage	Yes	No
Digital X-Ray Image Storage - For Presentation	Yes	No
Digital X-Ray Image Storage - For Processing	Yes	No
Digital Mammography X-Ray Image Storage - For Presentation	Yes	No
Digital Mammography X-Ray Image Storage - For Processing	Yes	No
Digital Intra-Oral X-Ray Image Storage - For Presentation	Yes	No
Digital Intra-Oral X-Ray Image Storage - For Processing	Yes	No
CT Image Storage	Yes	No
Enhanced CT Image Storage	Yes	No
Legacy Converted Enhanced CT Image Storage	Yes	No
Ultrasound Multi-frame Image Storage (Retired)	Yes	No
Ultrasound Multi-frame Image Storage	Yes	No
MR Image Storage	Yes	No
Enhanced MR Image Storage	Yes	No
MR Spectroscopy Storage	Yes	No
Enhanced MR Color Image Storage	Yes	No
Legacy Converted Enhanced MR Image Storage	Yes	No
Nuclear Medicine Image Storage (Retired)	Yes	No
Ultrasound Image Storage (Retired)	Yes	No
Ultrasound Image Storage	Yes	No
Enhanced US Volume Storage	Yes	No
Secondary Capture Image Storage	Yes	No
Multi-frame Single Bit Secondary Capture Image Storage	Yes	No
Multi-frame Grayscale Byte Secondary Capture Image Storage	Yes	No
Multi-frame Grayscale Word Secondary Capture Image Storage	Yes	No
Multi-frame True Color Secondary Capture Image Storage	Yes	No
Standalone Overlay Storage (Retired)	Yes	No
Standalone Curve Storage (Retired)	Yes	No
Waveform Storage - Trial (Retired)	Yes	No
12-lead ECG Waveform Storage	Yes	No
General ECG Waveform Storage	Yes	No
Ambulatory ECG Waveform Storage	Yes	No
Hemodynamic Waveform Storage	Yes	No
Cardiac Electrophysiology Waveform Storage	Yes	No
Basic Voice Audio Waveform Storage	Yes	No

General Audio Waveform Storage	Yes	No
Arterial Pulse Waveform Storage	Yes	No
Respiratory Waveform Storage	Yes	No
Multi-channel Respiratory Waveform Storage	Yes	No
Routine Scalp Electroencephalogram Waveform Storage	Yes	No
Electromyogram Waveform Storage	Yes	No
Electrooculogram Waveform Storage	Yes	No
Sleep Electroencephalogram Waveform Storage	Yes	No
Body Position Waveform Storage	Yes	No
Standalone Modality LUT Storage (Retired)	Yes	No
Standalone VOI LUT Storage (Retired)	Yes	No
Grayscale Softcopy Presentation State Storage	Yes	No
Color Softcopy Presentation State Storage	Yes	No
Pseudo-Color Softcopy Presentation State Storage	Yes	No
Blending Softcopy Presentation State Storage	Yes	No
XA/XRF Grayscale Softcopy Presentation State Storage	Yes	No
Grayscale Planar MPR Volumetric Presentation State Storage	Yes	No
Compositing Planar MPR Volumetric Presentation State Storage	Yes	No
Advanced Blending Presentation State Storage	Yes	No
Volume Rendering Volumetric Presentation State Storage	Yes	No
Segmented Volume Rendering Volumetric Presentation State Storage	Yes	No
Multiple Volume Rendering Volumetric Presentation State Storage	Yes	No
X-Ray Angiographic Image Storage	Yes	No
Enhanced XA Image Storage	Yes	No
X-Ray Radiofluoroscopic Image Storage	Yes	No
Enhanced XRF Image Storage	Yes	No
X-Ray Angiographic Bi-Plane Image Storage (Retired)	Yes	No
X-Ray 3D Angiographic Image Storage1.2.840.10008.5.1.4.1.1.13.1.1X-Ray 3D Craniofacial Image Storage	Yes	No
Breast Tomosynthesis Image Storage	Yes	No
Breast Projection X-Ray Image Storage - For Presentation	Yes	No
Breast Projection X-Ray Image Storage - For Processing	Yes	No
Intravascular Optical Coherence Tomography Image Storage - For Presentation	Yes	No
Intravascular Optical Coherence Tomography Image Storage - For Processing	Yes	No
Nuclear Medicine Image Storage	Yes	No
Parametric Map Storage	Yes	No
MR Image Storage Zero Padded (Retired)	Yes	No
Raw Data Storage	Yes	No
Spatial Registration Storage	Yes	No
Spatial Fiducials Storage	Yes	No
Deformable Spatial Registration Storage	Yes	No
Segmentation Storage	Yes	No
Surface Segmentation Storage	Yes	No

Tractography Results Storage	Yes	No
Real World Value Mapping Storage	Yes	No
Surface Scan Mesh Storage	Yes	No
Surface Scan Point Cloud Storage	Yes	No
VL Image Storage - Trial (Retired)	Yes	No
VL Multi-frame Image Storage - Trial (Retired)	Yes	No
VL Endoscopic Image Storage	Yes	No
Video Endoscopic Image Storage	Yes	No
VL Microscopic Image Storage	Yes	No
Video Microscopic Image Storage	Yes	No
VL Slide-Coordinates Microscopic Image Storage	Yes	No
VL Photographic Image Storage	Yes	No
Video Photographic Image Storage	Yes	No
Ophthalmic Photography 8 Bit Image Storage	Yes	No
Ophthalmic Photography 16 Bit Image Storage	Yes	No
Stereometric Relationship Storage	Yes	No
Ophthalmic Tomography Image Storage	Yes	No
Wide Field Ophthalmic Photography Stereographic Projection Image Storage	Yes	No
Wide Field Ophthalmic Photography 3D Coordinates Image Storage	Yes	No
Ophthalmic Optical Coherence Tomography En Face Image Storage	Yes	No
Ophthalmic Optical Coherence Tomography B-scan Volume Analysis Storage	Yes	No
VL Whole Slide Microscopy Image Storage	Yes	No
Dermoscopic Photography Image Storage	Yes	No
Lensometry Measurements Storage	Yes	No
Autorefraction Measurements Storage	Yes	No
Keratometry Measurements Storage	Yes	No
Subjective Refraction Measurements Storage	Yes	No
Visual Acuity Measurements Storage	Yes	No
Spectacle Prescription Report Storage	Yes	No
Ophthalmic Axial Measurements Storage	Yes	No
Intraocular Lens Calculations Storage	Yes	No
Macular Grid Thickness and Volume Report Storage	Yes	No
Ophthalmic Visual Field Static Perimetry Measurements Storage	Yes	No
Ophthalmic Thickness Map Storage	Yes	No
Corneal Topography Map Storage	Yes	No
Text SR Storage - Trial (Retired)	Yes	No
Audio SR Storage - Trial (Retired)	Yes	No
Detail SR Storage - Trial (Retired)	Yes	No
Comprehensive SR Storage - Trial (Retired)	Yes	No
Basic Text SR Storage	Yes	No
Enhanced SR Storage	Yes	No
Comprehensive SR Storage	Yes	No
Comprehensive 3D SR Storage	Yes	No

Extensible SR Storage	Yes	No
Procedure Log Storage	Yes	No
Mammography CAD SR Storage	Yes	No
Key Object Selection Document Storage	Yes	No
Chest CAD SR Storage	Yes	No
X-Ray Radiation Dose SR Storage	Yes	No
Radiopharmaceutical Radiation Dose SR Storage	Yes	No
Colon CAD SR Storage	Yes	No
Implantation Plan SR Storage	Yes	No
Acquisition Context SR Storage	Yes	No
Simplified Adult Echo SR Storage	Yes	No
Patient Radiation Dose SR Storage	Yes	No
Planned Imaging Agent Administration SR Storage	Yes	No
Performed Imaging Agent Administration SR Storage	Yes	No
Content Assessment Results Storage	Yes	No
Encapsulated PDF Storage	Yes	No
Encapsulated CDA Storage	Yes	No
Encapsulated STL Storage	Yes	No
Encapsulated OBJ Storage	Yes	No
Encapsulated MTL Storage	Yes	No
Positron Emission Tomography Image Storage	Yes	No
Legacy Converted Enhanced PET Image Storage	Yes	No
Standalone PET Curve Storage (Retired)	Yes	No
Enhanced PET Image Storage	Yes	No
Basic Structured Display Storage	Yes	No
CT Defined Procedure Protocol Storage	Yes	No
CT Performed Procedure Protocol Storage	Yes	No
RT Image Storage	Yes	No
RT Dose Storage	Yes	No
RT Structure Set Storage	Yes	No
RT Beams Treatment Record Storage	Yes	No
RT Plan Storage	Yes	No
RT Brachy Treatment Record Storage	Yes	No
RT Treatment Summary Record Storage	Yes	No
RT Ion Plan Storage	Yes	No
RT Ion Beams Treatment Record Storage	Yes	No
RT Physician Intent Storage	Yes	No
RT Segment Annotation Storage	Yes	No
RT Radiation Set Storage	Yes	No
C-Arm Photon-Electron Radiation Storage	Yes	No
Tomotherapeutic Radiation Storage	Yes	No
Robotic-Arm Radiation Storage	Yes	No
RT Radiation Record Set Storage	Yes	No

RT Radiation Salvage Record Storage	Yes	No
Tomotherapeutic Radiation Record Storage	Yes	No
C-Arm Photon-Electron Radiation Record Storage	Yes	No
Robotic Radiation Record Storage	Yes	No
DICOS CT Image Storage	Yes	No
DICOS Digital X-Ray Image Storage - For Presentation	Yes	No
DICOS Digital X-Ray Image Storage - For Processing	Yes	No
DICOS Threat Detection Report Storage	Yes	No
DICOS 2D AIT Storage	Yes	No
DICOS 3D AIT Storage	Yes	No
DICOS Quadrupole Resonance (QR) Storage	Yes	No
Eddy Current Image Storage	Yes	No
Eddy Current Multi-frame Image Storage	Yes	No
RT Beams Delivery Instruction Storage - Trial (Retired)	Yes	No
RT Conventional Machine Verification - Trial (Retired)	Yes	No
RT Ion Machine Verification - Trial (Retired)	Yes	No
RT Beams Delivery Instruction Storage	Yes	No
RT Brachy Application Setup Delivery Instruction Storage	Yes	No
Hanging Protocol Storage	Yes	No
Colour Palette Storage	Yes	No
Generic Implant Template Storage	Yes	No
Implant Assembly Template Storage	Yes	No
Implant Template Group Storage	Yes	No
Private TomTec Annotation Storage	Yes	No
Private Toshiba US Image Storage	Yes	No
Private Fuji CR Image Storage	Yes	No
Private GE Collage Storage	Yes	No
Private ERAD Practice Builder Report Text Storage	Yes	No
Private ERAD Practice Builder Report Dictation Storage	Yes	No
Private Philips HP Live 3D 01 Storage	Yes	No
Private Philips HP Live 3D 02 Storage	Yes	No
Private GE 3D Model Storage	Yes	No
Private GE PET Raw Data Storage	Yes	No
Private GE RT Plan Storage	Yes	No
Private PixelMed Legacy Converted Enhanced CT Image Storage	Yes	No
Private PixelMed Legacy Converted Enhanced MR Image Storage	Yes	No
Private PixelMed Legacy Converted Enhanced PET Image Storage	Yes	No
Private PixelMed Floating Point Image Storage	Yes	No
Private Siemens CSA Non Image Storage	Yes	No
Private Siemens CT MR Volume Storage	Yes	No
Private Siemens AX Frame Sets Storage	Yes	No
Private Philips Specialised XA Storage	Yes	No
Private Philips CX Image Storage	Yes	No

Private Philips 3D Presentation State Storage	Yes	No
Private Philips VRML Storage	Yes	No
Private Philips Volume Set Storage	Yes	No
Private Philips Volume Storage (Retired)	Yes	No
Private Philips Volume Storage	Yes	No
Private Philips 3D Object Storage (Retired)	Yes	No
Private Philips 3D Object Storage	Yes	No
Private Philips Surface Storage (Retired)	Yes	No
Private Philips Surface Storage	Yes	No
Private Philips Composite Object Storage	Yes	No
Private Philips MR Cardio Profile Storage	Yes	No
Private Philips MR Cardio Storage (Retired)	Yes	No
Private Philips MR Cardio Storage	Yes	No
Private Philips CT Synthetic Image Storage	Yes	No
Private Philips MR Synthetic Image Storage	Yes	No
Private Philips MR Cardio Analysis Storage (Retired)	Yes	No
Private Philips MR Cardio Analysis Storage	Yes	No
Private Philips CX Synthetic Image Storage	Yes	No
Private Philips Perfusion Storage	Yes	No
Private Philips Perfusion Image Storage	Yes	No
Private Philips X-Ray MF Storage	Yes	No
Private Philips Live Run Storage	Yes	No
Private Philips Run Storage	Yes	No
Private Philips Reconstruction Storage	Yes	No
Private Philips MR Spectrum Storage	Yes	No
Private Philips MR Series Data Storage	Yes	No
Private Philips MR Color Image Storage	Yes	No
Private Philips MR Examcard Storage	Yes	No
Private PMOD Multi-frame Image Storage	Yes	No
Workflow Management		
Modality Worklist Information Model – FIND	Yes	No
Patient Root Query/Retrieve Information Model - FIND	Yes	No
Study Root Query/Retrieve Information Model - FIND	Yes	No
Patient/Study Only Query/Retrieve Information Model - FIND	Yes	No
Connectivity Verification		
Verification	Yes	No

2 Table of Contents

1 Conformance Statement Overview 2
2 Table of Contents 8
3 Introduction 10
3.1 Revision History 10
3.2 Audience 10
3.3 Remarks 10
3.4 Definitions and Terms 10
3.5 Abbreviations 12
3.6 References 12
4 Networking 14
4.1 Implementation Model 14
4.1.1 Implementation Data Flow 14
4.1.2 Functional Definition of AEs 14
4.1.2.1 Functional Definition of Verification Client Application Entity 14
4.1.2.2 Functional Definition of Storage Client Application Entity 14
4.1.2.3 Functional Definition of Modality Worklist Client Application Entity 14
4.1.2.4 Functional Definition of Query/Retrieve client Application Entity 14
4.1.3 Sequencing of Real–World Activities 15
4.2 AE Specifications 17
4.2.1 Verification Client AE Specification 17
4.2.1.1 SOP Classes 17
4.2.1.2 Associations Policies 17
4.2.1.2.1 General 17
4.2.1.2.2 Number of Associations 17
4.2.1.2.3 Asynchronous Nature 17
4.2.1.2.4 Implementation Identifying Information 17
4.2.1.3 Association Initiation Policy 17
4.2.1.3.1 Activity – Verify DICOM Communication 17
4.2.1.3.1.1 Description and Sequencing of Activity 17
4.2.1.3.1.2 Proposed Presentation Contexts 17
4.2.1.3.1.3 SOP Specific Conformance for Verification SOP Class 18
4.2.2 Storage Client Application Entity Specification 18
4.2.2.1 SOP Classes 18
4.2.2.2 Associations Policies 25
4.2.2.2.1 General 25
4.2.2.2.2 Number of Associations 25
4.2.2.2.3 Asynchronous Nature 25
4.2.2.2.4 Implementation Identifying Information 25
4.2.2.3 Association Initiation Policy 25
4.2.2.3.1 Activity – Send DICOM Instances 25
4.2.2.3.1.1 Description and Sequencing of Activity 25
4.2.2.3.1.2 Proposed Presentation Contexts 26
4.2.2.3.1.3 SOP Specific Conformance for Storage SOP Classes 36
4.2.3 Modality Worklist Client Application Entity Specification 37
4.2.3.1 SOP Classes 37
4.2.3.2 Associations Policies 37
4.2.3.2.1 General 37
4.2.3.2.2 Number of Associations 37
4.2.3.2.3 Asynchronous Nature 37
4.2.3.2.4 Implementation Identifying Information 37
4.2.3.3 Association Initiation Policy 38
4.2.3.3.1 Activity – Query Modality Worklist 38
4.2.3.3.1.1 Description and Sequencing of Activity 38
4.2.3.3.2.2 Proposed Presentation Contexts 38
4.2.3.3.2.3 SOP Specific Conformance for Modality Worklist SOP Class 39
4.2.4 Query/Retrieve Client Application Entity Specification 41
4.2.4.1 SOP Classes 41
4.2.4.2 Associations Policies 41
4.2.4.2.1 General 41
4.2.4.2.2 Number of Associations 41
4.2.4.2.3 Asynchronous Nature 41

4.2.4.2.4 Implementation Identifying Information 41
4.2.4.3 Association Initiation Policy 41
4.2.4.3.1 Activity – Query query/retrieve information 41
4.2.4.3.1.1 Description and Sequencing of Activity 41
4.2.4.3.2.2 Proposed Presentation Contexts 42
4.2.4.3.2.3 SOP Specific Conformance for Query/Retrieve SOP Class 43
4.3 Network Interfaces 43
4.3.1 Physical Network Interface 44
4.3.2 Additional Protocols 44
4.3.3 IPv4 and IPv6 Support 44
4.4 Configuration 44
4.4.1 AE Title/Presentation Address Mapping 44
4.4.1.1 Local AE Titles 44
4.4.1.2 Remote AE Titles 44
4.4.2 Parameters 44
5 Media Interchange 46
6 Support of Extended Character Sets 47
7 Security 48
8 Annexes 49
8.1 IOD Contents 49
8.1.1 File Meta Information 49
8.1.2 Created SOP Instances 50
8.1.2.1 Secondary Capture IOD modules 50
8.1.2.2 Encapsulated PDF IOD modules 51
8.1.2.3 IOD modules 51
8.1.3 Usage of Attributes from Received IODs 60
8.1.4 Attribute Mapping 60
8.1.5 Coerced/Modified Fields 62
8.1.6 Additional fields 62
8.2 Attributes subject to update 62
8.2.1 Attributes change by operator 62
8.2.2 Attributes change with Modality worklist 63
8.3 Attributes subject to anonymization 64
8.3.1 Attribute to anonymize 65
8.3 Data Dictionary of Private Attributes 69
8.4 Coded Terminology and Templates 69
8.5 Greyscale Image Consistency 69
8.6 Standard Extended / Specialized/ Private SOP Classes 69
8.7 Private Transfer Syntaxes 69

3 Introduction

3.1 Revision History

Version	Date	Author	Changes
1.0	April 2021	Kęstutis Freigofas	Initial draft
1.1	May 2021	Kęstutis Freigofas	Fix Implementation Class UID
2.0	Jun 2021	Kęstutis Freigofas	Update Content Date, Content Time value description
2.1	Sep 2021	Kęstutis Freigofas	Change station name value
2.2	Nov 2021	Kęstutis Freigofas	Add institution name
2.3	Jan 2022	Kęstutis Freigofas	Additional fields
2.4	Feb 2022	Kęstutis Freigofas	Change Additional fields VR to LT
2.5	Aug 2022	Kęstutis Freigofas	Update version
2.6	Jun 2023	Kęstutis Freigofas	Update IOD
2.7	May 2023	Kęstutis Freigofas	Update IOD, Anonymization, Attribute changes
2.8	Oct. 2023	Kęstutis Freigofas	Update version
2.9	Dec 2023	Kęstutis Freigofas	Update version
3	Apr 2024	Kęstutis Freigofas	Update version
3.1	Aug 2024	Kęstutis Freigofas	Update version
3.2	Jan 2025	Kęstutis Freigofas	Update version
3.3	Jun 2025	Kęstutis Freigofas	Update version
3.4	Dec 2025	Kęstutis Freigofas	Update version
3.5	Feb 2026	Kęstutis Freigofas	Update version

3.2 Audience

This document is intended for the following:
• Potential users
• System integrators of medical equipment
It is assumed that the reader is familiar with the DICOM standard.

3.3 Remarks

DICOM, by itself, does not guarantee interoperability. However, the Conformance Statement facilitates a first level validation for interoperability between different applications supporting the same DICOM functionality.
This Conformance Statement is not intended to replace validation with other DICOM equipment to ensure proper exchange of information intended.
The scope of this Conformance Statement is to facilitate communication with other vendors' medical equipment. The Conformance Statement should be read and understood in conjunction with the DICOM Standard. However, by itself it is not guaranteed to ensure the desired interoperability and successful interconnectivity with existing DICOM systems.
The user should be aware of the following important issues:
• Test procedures should be defined to validate the desired level of connectivity.
• The DICOM standard will evolve to meet the users' future requirements.

3.4 Definitions and Terms

Informal definitions are provided for the following terms used in this Conformance Statement. The DICOM Standard is the authoritative source for formal definitions of these terms.

Abstract Syntax

the information agreed to be exchanged between applications, generally equivalent to a Service/Object Pair (SOP) Class.

Examples: Verification SOP Class, Modality Worklist Information Model Find SOP Class, Secondary Capture Image Storage SOP Class.

Application Entity (AE)

an end point of a DICOM information exchange, including the DICOM network or media interface software; i.e., the software that sends or receives DICOM information objects or messages.

Application Entity Title

the externally known name of an Application Entity, used to identify a DICOM application to other DICOM applications on the network.

Application Context

the specification of the type of communication used between Application Entities.

Example: DICOM network protocol.

Association

a network communication channel set up between Application Entities.

Attribute

a unit of information in an object definition; a data element identified by a tag. The information may be a complex data structure (Sequence), itself composed of lower level data elements.

Examples: Patient ID (0010,0020), Accession Number (0008,0050), Photometric Interpretation (0028,0004), Procedure Code Sequence (0008,1032).

Information Object Definition (IOD)

the specified set of Attributes that comprise a type of data object; does not represent a specific instance of the data object, but rather a class of similar data objects that have the same properties. The Attributes may be specified as Mandatory (Type 1), Required but possibly unknown (Type 2), or Optional (Type 3), and there may be conditions associated with the use of an Attribute (Types 1C and 2C).

Examples: MR Image IOD, CT Image IOD, Print Job IOD.

Module

a set of Attributes within an Information Object Definition that are logically related to each other.

Example: Patient Module includes Patient Name, Patient ID, Patient Birth Date, and Patient Sex.

Negotiation

first phase of Association establishment that allows Application Entities to agree on the types of data to be exchanged and how that data will be encoded.

Presentation Context

the set of DICOM network services used over an Association, as negotiated between Application Entities; includes Abstract Syntaxes and Transfer Syntaxes.

Protocol Data Unit (PDU)

a packet (piece) of a DICOM message sent across the network. Devices must specify the maximum size packet they can receive for DICOM messages.

Query Key

A input value for a query process. Query Keys denote the set of DICOM tags that are sent from the SCU to SCP and thus control the query result.

Service Class Provider (SCP)

role of an Application Entity that provides a DICOM network service; typically, a server that performs operations requested by another Application Entity (Service Class User).

Examples: Picture Archiving and Communication System (image storage SCP, and image query/retrieve SCP), Radiology Information System (modality worklist SCP).

Service Class User (SCU)

role of an Application Entity that uses a DICOM network service; typically, a client.

Examples: imaging modality (image storage SCU, and modality worklist SCU), imaging workstation (image query/retrieve SCU)

Service/Object Pair (SOP) Class

the specification of the network or media transfer (service) of a particular type of data (object); the fundamental unit of DICOM interoperability specification.

Examples: Ultrasound Image Storage Service, Basic Grayscale Print Management.

Service/Object Pair (SOP) Instance

an information object; a specific occurrence of information exchanged in a SOP Class. Examples: a specific x-ray image.

Tag

a 32-bit identifier for a data element, represented as a pair of four-digit hexadecimal numbers, the "group" and the "element". If the "group" number is odd, the tag is for a private (manufacturer-specific) data element.

Examples: (0010,0020) [Patient ID], (07FE,0010) [Pixel Data], (0019,0210) [private data element]

Transfer Syntax

the encoding used for exchange of DICOM information objects and messages.

Examples: JPEG compressed (images), little endian explicit value representation.

Unique Identifier (UID)

a globally unique "dotted decimal" string that identifies a specific object or a class of objects; an ISO-8824 Object Identifier.

Examples: Study Instance UID, SOP Class UID, SOP Instance UID.

Value Representation (VR)

the format type of an individual DICOM data element, such as text, an integer, a person's name, or a code. DICOM information objects can be transmitted with either explicit identification of the type of each data element (Explicit VR), or without explicit identification (Implicit VR); with Implicit VR, the receiving application must use a DICOM data dictionary to look up the format of each data element.

3.5 Abbreviations

The following acronyms are used in this document.

- AE — Application Entity
- AET — Application Entity Title
- DICOM — Digital Imaging and Communication in Medicine
- DIMSE — DICOM Message Service Element
- ILE — Implicit VR Little Endian
- ISO — International Standards Organization
- LUT — Look-up Table
- MWL — Modality Worklist
- Q/R — Query/Retrieve
- NEMA — National Electrical Manufacturers Association
- PDU — Protocol Data Unit
- SCP — Storage Class Provider
- SCU — Storage Class User
- SOP — Service Object Pair
- TCP/IP — Transmission Control Protocol/Internet Protocol
- TLS — Transport Layer Security
- UID — Unique Identifier
- VR — Value Representation

3.6 References

NEMA PS3 / ISO 12052, Digital Imaging and Communications in Medicine (DICOM) Standard, National Electrical Manufacturers Association, Rosslyn, VA, USA (available free at http://medical.nema.org/)

4 Networking

4.1 Implementation Model

SendToPACS is a Windows application that converts images, videos and PDF into DICOM Part 10 compliant files. Application will send these images and other DIOCM images to remote equipment using the DICOM protocol. Application uses the DICOM Worklist Management service to populate information in generated DICOM datasets.
It is logically divided into different DICOM Application Entities: Verification Client, Storage Client and Modality Worklist or Query/Retrieve client. Modality worklist client and Query/Retrieve client use the same Title. All AEs share the same main SendToPACS Title.
These Clients are basically modified third–party libraries build-in SendToPACS main JAVA application.

4.1.1 Implementation Data Flow

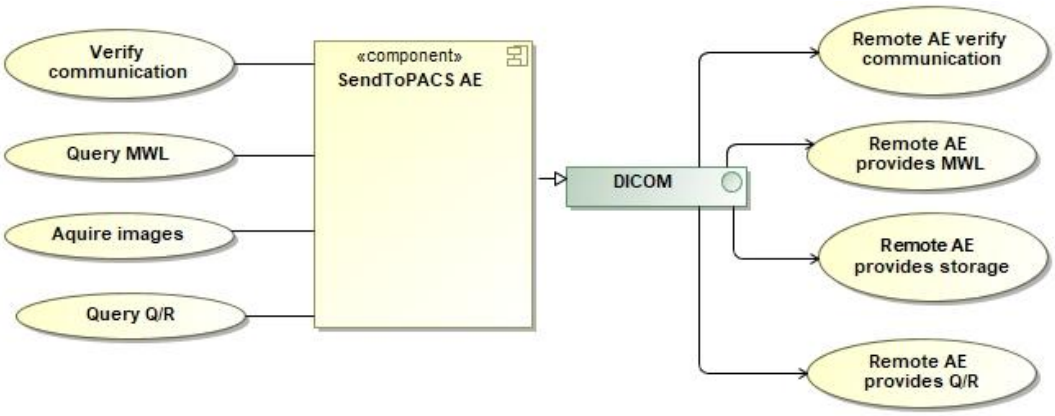

Figure 1. SendToPACS Data Flow Diagram

4.1.2 Functional Definition of AEs

4.1.2.1 Functional Definition of Verification Client Application Entity

The Verification Client Application Entity is a Verification SCU. It connects to the presentation address given as the Called Application Entity Title and establishes an Association with Presentation Context of the Verification Service Class. A message is then shown to the operator detailing whether the association was established successfully or not.

4.1.2.2 Functional Definition of Storage Client Application Entity

The Storage Client Application Entity is a Storage SCU. It connects to the presentation address given as the Called Application Entity Title and establishes an Association with Presentation Context of the Storage Service Class. Then it sends any supported DICOM Instances specified by the operator, over a Storage Request.

4.1.2.3 Functional Definition of Modality Worklist Client Application Entity

The Modality Worklist Client Application Entity connects at the presentation address given as a Called Application Entity Title. It will propose Associations with Presentation Context for SOP Class of the Modality Worklist Service Class.
When a WORKLIST–FIND request is sent, Modality Worklist Client AE will wait on the same Association for a C–FIND response and then release the Association. The operator is provided with a set of worklist items matching the query request.

4.1.2.4 Functional Definition of Query/Retrieve client Application Entity

The Query/Retrieve Client Application Entity connects at the presentation address given as a Called Application Entity Title. It will propose Associations with Presentation Context for SOP Class of the Query/Retrieve Information Service Class. When a Query/Retrieve Information Model–FIND request is sent, Modality Query/Retrieve Client AE will wait on the same Association for a C–FIND response and then release the Association. The operator is provided with a set of information items matching the query request.

4.1.3 Sequencing of Real–World Activities

See Fig. 2 on the next page for illustration.

Acquire images/videos/PDF/DICOM

SendToPACS interface allows to select (drag and drop) multiple images, video, PDF or DICOM files for processing. DICOM files will be scanned for information about study and patient attributes to change.

Enter or update patient and study data

After selecting files, operator must fill information form about patient and study for (NON-DICOM) image/videos or PDF files. Information can be selected from MWL AE, Q/R AE, from scanned DICOM files or fill manually dialog form. SendToPACS allow to change patient and study information for DICOM files, that belongs the same study. Can fill similar form as NON-DICOM files.

Store images

The operator decides that the study contains enough information and start update and conversion.
All DICOM files will be updated with changed attributes.
All images and videos are checked (if need – change format or re-encode) before conversion to DICOM.
If check succeeds – proceeds image, video and PDF file conversion to DICOM format.
Finally, for DICOM files, if operator checked *Decompress* settings for remote AE - will apply pixel data decompression.
If everything succeeds – start send DICOM files to remote Storage AE.

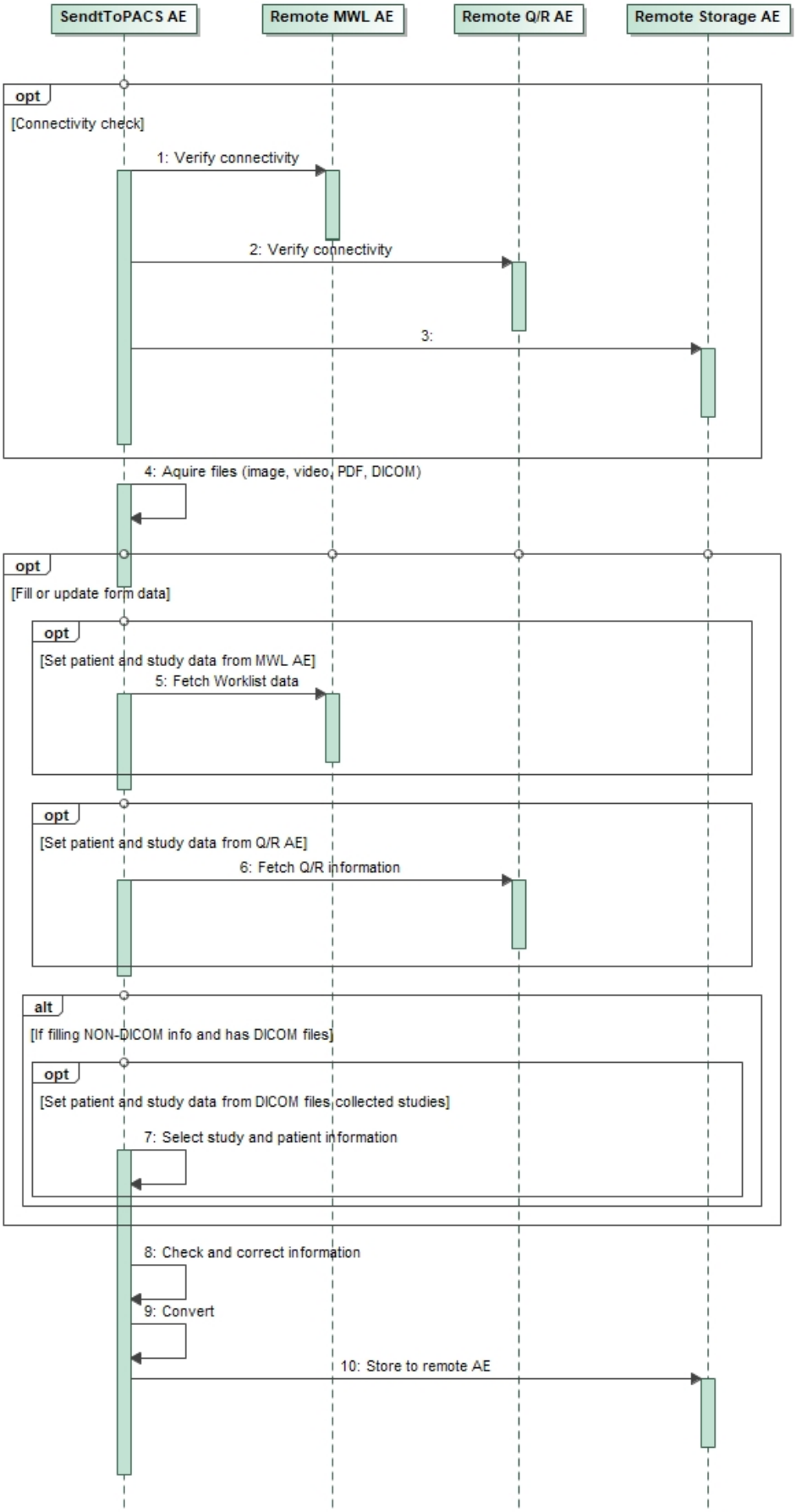

Figure 2. A typical diagnostic case

4.2 AE Specifications

4.2.1 Verification Client AE Specification

4.2.1.1 SOP Classes

SendToPACS Verification Client Application Entity provides Standard Conformance to the following SOP Classes:

Table 2. SOP Classes for Verification Client AE

SOP Class Name	SOP Class UID	SCU	SCP
Verification SOP Class	1.2.840.10008.1.1	Yes	No

4.2.1.2 Associations Policies

4.2.1.2.1 General

The Verification Client AE will propose Association Requests for the Verification Service.
The Verification Client AE itself does not accept Associations.
The DICOM standard application context name for DICOM 3.0 is always accepted and proposed:

Table 3. DICOM application context name for Verification Client AE

Application Context Name	1.2.840.10008.3.1.1.1

4.2.1.2.2 Number of Associations

Only a single Association is active at the moment. This is a direct result of the operator pressing a button dedicated to a particular Remote AE.

4.2.1.2.3 Asynchronous Nature

The Verification Client does not support asynchronous communication (multiple outstanding transactions over a single Association).

4.2.1.2.4 Implementation Identifying Information

The implementation information for this Application Entity is:

Table 4. DICOM Implementation Class and Version for Verification Client AE

Implementation Class UID	1.3.6.1.4.1.44316.3
Implementation Version Name	MDSENDTOPACS

4.2.1.3 Association Initiation Policy

4.2.1.3.1 Activity – Verify DICOM Communication

4.2.1.3.1.1 Description and Sequencing of Activity

This activity is available as part of the configuration process. When the user has entered Title, IP and Port of a particular Remote AE press a nearby "Echo" button to immediately verify accessibility of that single AE.
Only the Verification SOP class is proposed. After the Remote AE accepts the association, a C–ECHO message is exchanged.
A message will appear stating results of the check.

4.2.1.3.1.2 Proposed Presentation Contexts

Table 5. Accepted Presentation Contexts for Verification Client AE

Abstract Syntax		Transfer Syntax		Role	Ext. Neg.
Name	**UID**	**Name List**	**UID List**		
Verification SOP Class	1.2.840.10008.1.1	Implicit VR Little Endian	1.2.840.10008.1.2	SCU	None

4.2.1.3.1.3 SOP Specific Conformance for Verification SOP Class

SendToPACS Verification Client provides standard conformance to the DICOM Verification Service Class as a SCU.

4.2.2 Storage Client Application Entity Specification

4.2.2.1 SOP Classes

SendToPACS Storage Client Application Entity provides Standard Conformance to the following SOP Classes:

Table 6. SOP Classes for Storage Client AE

SOP Class Name	SOP Class UID	SCU	SCP
Computed Radiography Image Storage	1.2.840.10008.5.1.4.1.1.1	Yes	No
Digital X-Ray Image Storage - For Presentation	1.2.840.10008.5.1.4.1.1.1.1	Yes	No
Digital X-Ray Image Storage - For Processing	1.2.840.10008.5.1.4.1.1.1.1.1	Yes	No
Digital Mammography X-Ray Image Storage - For Presentation	1.2.840.10008.5.1.4.1.1.1.2	Yes	No
Digital Mammography X-Ray Image Storage - For Processing	1.2.840.10008.5.1.4.1.1.1.2.1	Yes	No
Digital Intra-Oral X-Ray Image Storage - For Presentation	1.2.840.10008.5.1.4.1.1.1.3	Yes	No
Digital Intra-Oral X-Ray Image Storage - For Processing	1.2.840.10008.5.1.4.1.1.1.3.1	Yes	No
CT Image Storage	1.2.840.10008.5.1.4.1.1.2	Yes	No
Enhanced CT Image Storage	1.2.840.10008.5.1.4.1.1.2.1	Yes	No
Legacy Converted Enhanced CT Image Storage	1.2.840.10008.5.1.4.1.1.2.2	Yes	No
Ultrasound Multi-frame Image Storage (Retired)	1.2.840.10008.5.1.4.1.1.3	Yes	No
Ultrasound Multi-frame Image Storage	1.2.840.10008.5.1.4.1.1.3.1	Yes	No
MR Image Storage	1.2.840.10008.5.1.4.1.1.4	Yes	No
Enhanced MR Image Storage	1.2.840.10008.5.1.4.1.1.4.1	Yes	No
MR Spectroscopy Storage	1.2.840.10008.5.1.4.1.1.4.2	Yes	No
Enhanced MR Color Image Storage	1.2.840.10008.5.1.4.1.1.4.3	Yes	No
Legacy Converted Enhanced MR Image Storage	1.2.840.10008.5.1.4.1.1.4.4	Yes	No
Nuclear Medicine Image Storage (Retired)	1.2.840.10008.5.1.4.1.1.5	Yes	No
Ultrasound Image Storage (Retired)	1.2.840.10008.5.1.4.1.1.6	Yes	No
Ultrasound Image Storage	1.2.840.10008.5.1.4.1.1.6.1	Yes	No
Enhanced US Volume Storage	1.2.840.10008.5.1.4.1.1.6.2	Yes	No
Secondary Capture Image Storage	1.2.840.10008.5.1.4.1.1.7	Yes	No
Multi-frame Single Bit Secondary Capture Image Storage	1.2.840.10008.5.1.4.1.1.7.1	Yes	No
Multi-frame Grayscale Byte Secondary Capture Image Storage	1.2.840.10008.5.1.4.1.1.7.2	Yes	No
Multi-frame Grayscale Word Secondary Capture Image Storage	1.2.840.10008.5.1.4.1.1.7.3	Yes	No
Multi-frame True Color Secondary Capture Image Storage	1.2.840.10008.5.1.4.1.1.7.4	Yes	No

Standalone Overlay Storage (Retired)	1.2.840.10008.5.1.4.1.1.8	Yes	No
Standalone Curve Storage (Retired)	1.2.840.10008.5.1.4.1.1.9	Yes	No
Waveform Storage - Trial (Retired)	1.2.840.10008.5.1.4.1.1.9.1	Yes	No
12-lead ECG Waveform Storage	1.2.840.10008.5.1.4.1.1.9.1.1	Yes	No
General ECG Waveform Storage	1.2.840.10008.5.1.4.1.1.9.1.2	Yes	No
Ambulatory ECG Waveform Storage	1.2.840.10008.5.1.4.1.1.9.1.3	Yes	No
Hemodynamic Waveform Storage	1.2.840.10008.5.1.4.1.1.9.2.1	Yes	No
Cardiac Electrophysiology Waveform Storage	1.2.840.10008.5.1.4.1.1.9.3.1	Yes	No
Basic Voice Audio Waveform Storage	1.2.840.10008.5.1.4.1.1.9.4.1	Yes	No
General Audio Waveform Storage	1.2.840.10008.5.1.4.1.1.9.4.2	Yes	No
Arterial Pulse Waveform Storage	1.2.840.10008.5.1.4.1.1.9.5.1	Yes	No
Respiratory Waveform Storage	1.2.840.10008.5.1.4.1.1.9.6.1	Yes	No
Multi-channel Respiratory Waveform Storage	1.2.840.10008.5.1.4.1.1.9.6.2	Yes	No
Routine Scalp Electroencephalogram Waveform Storage	1.2.840.10008.5.1.4.1.1.9.7.1	Yes	No
Electromyogram Waveform Storage	1.2.840.10008.5.1.4.1.1.9.7.2	Yes	No
Electrooculogram Waveform Storage	1.2.840.10008.5.1.4.1.1.9.7.3	Yes	No
Sleep Electroencephalogram Waveform Storage	1.2.840.10008.5.1.4.1.1.9.7.4	Yes	No
Body Position Waveform Storage	1.2.840.10008.5.1.4.1.1.9.8.1	Yes	No
Standalone Modality LUT Storage (Retired)	1.2.840.10008.5.1.4.1.1.10	Yes	No
Standalone VOI LUT Storage (Retired)	1.2.840.10008.5.1.4.1.1.11	Yes	No
Grayscale Softcopy Presentation State Storage	1.2.840.10008.5.1.4.1.1.11.1	Yes	No
Color Softcopy Presentation State Storage	1.2.840.10008.5.1.4.1.1.11.2	Yes	No
Pseudo-Color Softcopy Presentation State Storage	1.2.840.10008.5.1.4.1.1.11.3	Yes	No
Blending Softcopy Presentation State Storage	1.2.840.10008.5.1.4.1.1.11.4	Yes	No
XA/XRF Grayscale Softcopy Presentation State Storage	1.2.840.10008.5.1.4.1.1.11.5	Yes	No
Grayscale Planar MPR Volumetric Presentation State Storage	1.2.840.10008.5.1.4.1.1.11.6	Yes	No
Compositing Planar MPR Volumetric Presentation State Storage	1.2.840.10008.5.1.4.1.1.11.7	Yes	No
Advanced Blending Presentation State Storage	1.2.840.10008.5.1.4.1.1.11.8	Yes	No
Volume Rendering Volumetric Presentation State Storage	1.2.840.10008.5.1.4.1.1.11.9	Yes	No
Segmented Volume Rendering Volumetric Presentation State Storage	1.2.840.10008.5.1.4.1.1.11.10	Yes	No
Multiple Volume Rendering Volumetric Presentation State Storage	1.2.840.10008.5.1.4.1.1.11.11	Yes	No
X-Ray Angiographic Image Storage	1.2.840.10008.5.1.4.1.1.12.1	Yes	No

Enhanced XA Image Storage	1.2.840.10008.5.1.4.1.1.12.1.1	Yes	No
X-Ray Radiofluoroscopic Image Storage	1.2.840.10008.5.1.4.1.1.12.2	Yes	No
Enhanced XRF Image Storage	1.2.840.10008.5.1.4.1.1.12.2.1	Yes	No
X-Ray Angiographic Bi-Plane Image Storage (Retired)	1.2.840.10008.5.1.4.1.1.12.3	Yes	No
X-Ray 3D Craniofacial Image Storage	1.2.840.10008.5.1.4.1.1.13.1.2	Yes	No
Breast Tomosynthesis Image Storage	1.2.840.10008.5.1.4.1.1.13.1.3	Yes	No
Breast Projection X-Ray Image Storage - For Presentation	1.2.840.10008.5.1.4.1.1.13.1.4	Yes	No
Breast Projection X-Ray Image Storage - For Processing	1.2.840.10008.5.1.4.1.1.13.1.5	Yes	No
Intravascular Optical Coherence Tomography Image Storage - For Presentation	1.2.840.10008.5.1.4.1.1.14.1	Yes	No
Intravascular Optical Coherence Tomography Image Storage - For Processing	1.2.840.10008.5.1.4.1.1.14.2	Yes	No
Nuclear Medicine Image Storage	1.2.840.10008.5.1.4.1.1.20	Yes	No
Parametric Map Storage	1.2.840.10008.5.1.4.1.1.30	Yes	No
MR Image Storage Zero Padded (Retired)	1.2.840.10008.5.1.4.1.1.40	Yes	No
Raw Data Storage	1.2.840.10008.5.1.4.1.1.66	Yes	No
Spatial Registration Storage	1.2.840.10008.5.1.4.1.1.66.1	Yes	No
Spatial Fiducials Storage	1.2.840.10008.5.1.4.1.1.66.2	Yes	No
Deformable Spatial Registration Storage	1.2.840.10008.5.1.4.1.1.66.3	Yes	No
Segmentation Storage	1.2.840.10008.5.1.4.1.1.66.4	Yes	No
Surface Segmentation Storage	1.2.840.10008.5.1.4.1.1.66.5	Yes	No
Tractography Results Storage	1.2.840.10008.5.1.4.1.1.66.6	Yes	No
Real World Value Mapping Storage	1.2.840.10008.5.1.4.1.1.67	Yes	No
Surface Scan Mesh Storage	1.2.840.10008.5.1.4.1.1.68.1	Yes	No
Surface Scan Point Cloud Storage	1.2.840.10008.5.1.4.1.1.68.2	Yes	No
VL Image Storage - Trial (Retired)	1.2.840.10008.5.1.4.1.1.77.1	Yes	No
VL Multi-frame Image Storage - Trial (Retired)	1.2.840.10008.5.1.4.1.1.77.2	Yes	No
VL Endoscopic Image Storage	1.2.840.10008.5.1.4.1.1.77.1.1	Yes	No
Video Endoscopic Image Storage	1.2.840.10008.5.1.4.1.1.77.1.1.1	Yes	No
VL Microscopic Image Storage	1.2.840.10008.5.1.4.1.1.77.1.2	Yes	No
Video Microscopic Image Storage	1.2.840.10008.5.1.4.1.1.77.1.2.1	Yes	No
VL Slide-Coordinates Microscopic Image Storage	1.2.840.10008.5.1.4.1.1.77.1.3	Yes	No
VL Photographic Image Storage	1.2.840.10008.5.1.4.1.1.77.1.4	Yes	No
Video Photographic Image Storage	1.2.840.10008.5.1.4.1.1.77.1.4.1	Yes	No
Ophthalmic Photography 8 Bit Image Storage	1.2.840.10008.5.1.4.1.1.77.1.5.1	Yes	No
Ophthalmic Photography 16 Bit Image Storage	1.2.840.10008.5.1.4.1.1.77.1.5.2	Yes	No
Stereometric Relationship Storage	1.2.840.10008.5.1.4.1.1.77.1.5.3	Yes	No
Ophthalmic Tomography Image Storage	1.2.840.10008.5.1.4.1.1.77.1.5.4	Yes	No

Wide Field Ophthalmic Photography Stereographic Projection Image Storage	1.2.840.10008.5.1.4.1.1.77.1.5.5	Yes	No
Wide Field Ophthalmic Photography 3D Coordinates Image Storage	1.2.840.10008.5.1.4.1.1.77.1.5.6	Yes	No
Ophthalmic Optical Coherence Tomography En Face Image Storage	1.2.840.10008.5.1.4.1.1.77.1.5.7	Yes	No
Ophthalmic Optical Coherence Tomography B-scan Volume Analysis Storage	1.2.840.10008.5.1.4.1.1.77.1.5.8	Yes	No
VL Whole Slide Microscopy Image Storage	1.2.840.10008.5.1.4.1.1.77.1.6	Yes	No
Dermoscopic Photography Image Storage	1.2.840.10008.5.1.4.1.1.77.1.7	Yes	No
Lensometry Measurements Storage	1.2.840.10008.5.1.4.1.1.78.1	Yes	No
Autorefraction Measurements Storage	1.2.840.10008.5.1.4.1.1.78.2	Yes	No
Keratometry Measurements Storage	1.2.840.10008.5.1.4.1.1.78.3	Yes	No
Subjective Refraction Measurements Storage	1.2.840.10008.5.1.4.1.1.78.4	Yes	No
Visual Acuity Measurements Storage	1.2.840.10008.5.1.4.1.1.78.5	Yes	No
Spectacle Prescription Report Storage	1.2.840.10008.5.1.4.1.1.78.6	Yes	No
Ophthalmic Axial Measurements Storage	1.2.840.10008.5.1.4.1.1.78.7	Yes	No
Intraocular Lens Calculations Storage	1.2.840.10008.5.1.4.1.1.78.8	Yes	No
Macular Grid Thickness and Volume Report Storage	1.2.840.10008.5.1.4.1.1.79.1	Yes	No
Ophthalmic Visual Field Static Perimetry Measurements Storage	1.2.840.10008.5.1.4.1.1.80.1	Yes	No
Ophthalmic Thickness Map Storage	1.2.840.10008.5.1.4.1.1.81.1	Yes	No
Corneal Topography Map Storage	1.2.840.10008.5.1.4.1.1.82.1	Yes	No
Text SR Storage - Trial (Retired)	1.2.840.10008.5.1.4.1.1.88.1	Yes	No
Audio SR Storage - Trial (Retired)	1.2.840.10008.5.1.4.1.1.88.2	Yes	No
Detail SR Storage - Trial (Retired)	1.2.840.10008.5.1.4.1.1.88.3	Yes	No
Comprehensive SR Storage - Trial (Retired)	1.2.840.10008.5.1.4.1.1.88.4	Yes	No
Basic Text SR Storage	1.2.840.10008.5.1.4.1.1.88.11	Yes	No
Enhanced SR Storage	1.2.840.10008.5.1.4.1.1.88.22	Yes	No
Comprehensive SR Storage	1.2.840.10008.5.1.4.1.1.88.33	Yes	No
Comprehensive 3D SR Storage	1.2.840.10008.5.1.4.1.1.88.34	Yes	No
Extensible SR Storage	1.2.840.10008.5.1.4.1.1.88.35	Yes	No
Procedure Log Storage	1.2.840.10008.5.1.4.1.1.88.40	Yes	No
Mammography CAD SR Storage	1.2.840.10008.5.1.4.1.1.88.50	Yes	No
Key Object Selection Document Storage	1.2.840.10008.5.1.4.1.1.88.59	Yes	No
Chest CAD SR Storage	1.2.840.10008.5.1.4.1.1.88.65	Yes	No
X-Ray Radiation Dose SR Storage	1.2.840.10008.5.1.4.1.1.88.67	Yes	No
Radiopharmaceutical Radiation Dose SR Storage	1.2.840.10008.5.1.4.1.1.88.68	Yes	No
Colon CAD SR Storage	1.2.840.10008.5.1.4.1.1.88.69	Yes	No
Implantation Plan SR Storage	1.2.840.10008.5.1.4.1.1.88.70	Yes	No
Acquisition Context SR Storage	1.2.840.10008.5.1.4.1.1.88.71	Yes	No

Simplified Adult Echo SR Storage	1.2.840.10008.5.1.4.1.1.88.72	Yes	No
Patient Radiation Dose SR Storage	1.2.840.10008.5.1.4.1.1.88.73	Yes	No
Planned Imaging Agent Administration SR Storage	1.2.840.10008.5.1.4.1.1.88.74	Yes	No
Performed Imaging Agent Administration SR Storage	1.2.840.10008.5.1.4.1.1.88.75	Yes	No
Content Assessment Results Storage	1.2.840.10008.5.1.4.1.1.90.1	Yes	No
Encapsulated PDF Storage	1.2.840.10008.5.1.4.1.1.104.1	Yes	No
Encapsulated CDA Storage	1.2.840.10008.5.1.4.1.1.104.2	Yes	No
Encapsulated STL Storage	1.2.840.10008.5.1.4.1.1.104.3	Yes	No
Encapsulated OBJ Storage	1.2.840.10008.5.1.4.1.1.104.4	Yes	No
Encapsulated MTL Storage	1.2.840.10008.5.1.4.1.1.104.5	Yes	No
Positron Emission Tomography Image Storage	1.2.840.10008.5.1.4.1.1.128	Yes	No
Legacy Converted Enhanced PET Image Storage	1.2.840.10008.5.1.4.1.1.128.1	Yes	No
Standalone PET Curve Storage (Retired)	1.2.840.10008.5.1.4.1.1.129	Yes	No
Enhanced PET Image Storage	1.2.840.10008.5.1.4.1.1.130	Yes	No
Basic Structured Display Storage	1.2.840.10008.5.1.4.1.1.131	Yes	No
CT Defined Procedure Protocol Storage	1.2.840.10008.5.1.4.1.1.200.1	Yes	No
CT Performed Procedure Protocol Storage	1.2.840.10008.5.1.4.1.1.200.2	Yes	No
RT Image Storage	1.2.840.10008.5.1.4.1.1.481.1	Yes	No
RT Dose Storage	1.2.840.10008.5.1.4.1.1.481.2	Yes	No
RT Structure Set Storage	1.2.840.10008.5.1.4.1.1.481.3	Yes	No
RT Beams Treatment Record Storage	1.2.840.10008.5.1.4.1.1.481.4	Yes	No
RT Plan Storage	1.2.840.10008.5.1.4.1.1.481.5	Yes	No
RT Brachy Treatment Record Storage	1.2.840.10008.5.1.4.1.1.481.6	Yes	No
RT Treatment Summary Record Storage	1.2.840.10008.5.1.4.1.1.481.7	Yes	No
RT Ion Plan Storage	1.2.840.10008.5.1.4.1.1.481.8	Yes	No
RT Ion Beams Treatment Record Storage	1.2.840.10008.5.1.4.1.1.481.9	Yes	No
RT Physician Intent Storage	1.2.840.10008.5.1.4.1.1.481.10	Yes	No
RT Segment Annotation Storage	1.2.840.10008.5.1.4.1.1.481.11	Yes	No
RT Radiation Set Storage	1.2.840.10008.5.1.4.1.1.481.12	Yes	No
C-Arm Photon-Electron Radiation Storage	1.2.840.10008.5.1.4.1.1.481.13	Yes	No
Tomotherapeutic Radiation Storage	1.2.840.10008.5.1.4.1.1.481.14	Yes	No
Robotic-Arm Radiation Storage	1.2.840.10008.5.1.4.1.1.481.15	Yes	No
RT Radiation Record Set Storage	1.2.840.10008.5.1.4.1.1.481.16	Yes	No
RT Radiation Salvage Record Storage	1.2.840.10008.5.1.4.1.1.481.17	Yes	No
Tomotherapeutic Radiation Record Storage	1.2.840.10008.5.1.4.1.1.481.18	Yes	No
C-Arm Photon-Electron Radiation Record Storage	1.2.840.10008.5.1.4.1.1.481.19	Yes	No
Robotic Radiation Record Storage	1.2.840.10008.5.1.4.1.1.481.20	Yes	No
DICOS CT Image Storage	1.2.840.10008.5.1.4.1.1.501.1	Yes	No

DICOS Digital X-Ray Image Storage - For Presentation	1.2.840.10008.5.1.4.1.1.501.2.1	Yes	No
DICOS Digital X-Ray Image Storage - For Processing	1.2.840.10008.5.1.4.1.1.501.2.2	Yes	No
DICOS Threat Detection Report Storage	1.2.840.10008.5.1.4.1.1.501.3	Yes	No
DICOS 2D AIT Storage	1.2.840.10008.5.1.4.1.1.501.4	Yes	No
DICOS 3D AIT Storage	1.2.840.10008.5.1.4.1.1.501.5	Yes	No
DICOS Quadrupole Resonance (QR) Storage	1.2.840.10008.5.1.4.1.1.501.6	Yes	No
Eddy Current Image Storage	1.2.840.10008.5.1.4.1.1.601.1	Yes	No
Eddy Current Multi-frame Image Storage	1.2.840.10008.5.1.4.1.1.601.2	Yes	No
RT Beams Delivery Instruction Storage - Trial (Retired)	1.2.840.10008.5.1.4.34.1	Yes	No
RT Conventional Machine Verification - Trial (Retired)	1.2.840.10008.5.1.4.34.2	Yes	No
RT Ion Machine Verification - Trial (Retired)	1.2.840.10008.5.1.4.34.3	Yes	No
RT Beams Delivery Instruction Storage	1.2.840.10008.5.1.4.34.7	Yes	No
RT Brachy Application Setup Delivery Instruction Storage	1.2.840.10008.5.1.4.34.10	Yes	No
Hanging Protocol Storage	1.2.840.10008.5.1.4.38.1	Yes	No
Color Palette Storage	1.2.840.10008.5.1.4.39.1	Yes	No
Generic Implant Template Storage	1.2.840.10008.5.1.4.43.1	Yes	No
Implant Assembly Template Storage	1.2.840.10008.5.1.4.44.1	Yes	No
Implant Template Group Storage	1.2.840.10008.5.1.4.45.1	Yes	No
Private TomTec Annotation Storage	1.2.276.0.48.5.1.4.1.1.7	Yes	No
Private Toshiba US Image Storage	1.2.392.200036.9116.7.8.1.1.1	Yes	No
Private Fuji CR Image Storage	1.2.392.200036.9125.1.1.2	Yes	No
Private GE Collage Storage	1.2.528.1.1001.5.1.1.1	Yes	No
Private ERAD Practice Builder Report Text Storage	1.2.826.0.1.3680043.293.1.0.1	Yes	No
Private ERAD Practice Builder Report Dictation Storage	1.2.826.0.1.3680043.293.1.0.2	Yes	No
Private Philips HP Live 3D 01 Storage	1.2.840.113543.6.6.1.3.10001	Yes	No
Private Philips HP Live 3D 02 Storage	1.2.840.113543.6.6.1.3.10002	Yes	No
Private GE 3D Model Storage	1.2.840.113619.4.26	Yes	No
Private GE PET Raw Data Storage	1.2.840.113619.4.30	Yes	No
Private GE RT Plan Storage	1.2.840.113619.4.5.249	Yes	No
Private PixelMed Legacy Converted Enhanced CT Image Storage	1.3.6.1.4.1.5962.301.1	Yes	No
Private PixelMed Legacy Converted Enhanced MR Image Storage	1.3.6.1.4.1.5962.301.2	Yes	No
Private PixelMed Legacy Converted Enhanced PET Image Storage	1.3.6.1.4.1.5962.301.3	Yes	No
Private PixelMed Floating Point Image Storage	1.3.6.1.4.1.5962.301.9	Yes	No
Private Siemens CSA Non Image Storage	1.3.12.2.1107.5.9.1	Yes	No

Private Siemens CT MR Volume Storage	1.3.12.2.1107.5.99.3.10	Yes	No
Private Siemens AX Frame Sets Storage	1.3.12.2.1107.5.99.3.11	Yes	No
Private Philips Specialised XA Storage	1.3.46.670589.2.3.1.1	Yes	No
Private Philips CX Image Storage	1.3.46.670589.2.4.1.1	Yes	No
Private Philips 3D Presentation State Storage	1.3.46.670589.2.5.1.1	Yes	No
Private Philips VRML Storage	1.3.46.670589.2.8.1.1	Yes	No
Private Philips Volume Set Storage	1.3.46.670589.2.11.1.1	Yes	No
Private Philips Volume Storage (Retired)	1.3.46.670589.5.0.1	Yes	No
Private Philips Volume Storage	1.3.46.670589.5.0.1.1	Yes	No
Private Philips 3D Object Storage (Retired)	1.3.46.670589.5.0.2	Yes	No
Private Philips 3D Object Storage	1.3.46.670589.5.0.2.1	Yes	No
Private Philips Surface Storage (Retired)	1.3.46.670589.5.0.3	Yes	No
Private Philips Surface Storage	1.3.46.670589.5.0.3.1	Yes	No
Private Philips Composite Object Storage	1.3.46.670589.5.0.4	Yes	No
Private Philips MR Cardio Profile Storage	1.3.46.670589.5.0.7	Yes	No
Private Philips MR Cardio Storage (Retired)	1.3.46.670589.5.0.8	Yes	No
Private Philips MR Cardio Storage	1.3.46.670589.5.0.8.1	Yes	No
Private Philips CT Synthetic Image Storage	1.3.46.670589.5.0.9	Yes	No
Private Philips MR Synthetic Image Storage	1.3.46.670589.5.0.10	Yes	No
Private Philips MR Cardio Analysis Storage (Retired)	1.3.46.670589.5.0.11	Yes	No
Private Philips MR Cardio Analysis Storage	1.3.46.670589.5.0.11.1	Yes	No
Private Philips CX Synthetic Image Storage	1.3.46.670589.5.0.12	Yes	No
Private Philips Perfusion Storage	1.3.46.670589.5.0.13	Yes	No
Private Philips Perfusion Image Storage	1.3.46.670589.5.0.14	Yes	No
Private Philips X-Ray MF Storage	1.3.46.670589.7.8.1618510091	Yes	No
Private Philips Live Run Storage	1.3.46.670589.7.8.1618510092	Yes	No
Private Philips Run Storage	1.3.46.670589.7.8.16185100129	Yes	No
Private Philips Reconstruction Storage	1.3.46.670589.7.8.16185100130	Yes	No
Private Philips MR Spectrum Storage	1.3.46.670589.11.0.0.12.1	Yes	No
Private Philips MR Series Data Storage	1.3.46.670589.11.0.0.12.2	Yes	No
Private Philips MR Color Image Storage	1.3.46.670589.11.0.0.12.3	Yes	No
Private Philips MR Examcard Storage	1.3.46.670589.11.0.0.12.4	Yes	No
Private PMOD Multi-frame Image Storage	2.16.840.1.114033.5.1.4.1.1.130	Yes	No

Non-DICOM (images, videos, PDF) files will be converted to Secondary Capture Image Storage or Encapsulated PDF Storage IOD. SendToPACS allows to change to other SOP Class UID, but final DICOM file content will be Secondary Capture Image Storage or Encapsulated PDF Storage IOD.

4.2.2.2 Associations Policies

4.2.2.2.1 General

The Storage Client AE proposes Association Requests for the Storage Service.
The Storage Client AE itself does not accept Associations.
The DICOM standard application context name for DICOM 3.0 is always accepted and proposed:

Table 7. DICOM application context name for Storage Client AE

Application Context Name	1.2.840.10008.3.1.1.1

4.2.2.2.2 Number of Associations

Only a single Association is active at the moment. DICOM instances are sent one at a time.

4.2.2.2.3 Asynchronous Nature

The Storage Client does not support asynchronous communication (multiple outstanding transactions over a single Association).

4.2.2.2.4 Implementation Identifying Information

The implementation information for this Application Entity is:

Table 8. DICOM Implementation Class and Version for Storage Client AE

Implementation Class UID	1.3.6.1.4.1.44316.3
Implementation Version Name	MDSENDTOPACS

4.2.2.3 Association Initiation Policy

4.2.2.3.1 Activity – Send DICOM Instances

4.2.2.3.1.1 Description and Sequencing of Activity

See Fig. 3 on next page for illustration.

SendToPACS always sends as many items as possible and the failure for every instance is indicated during process.

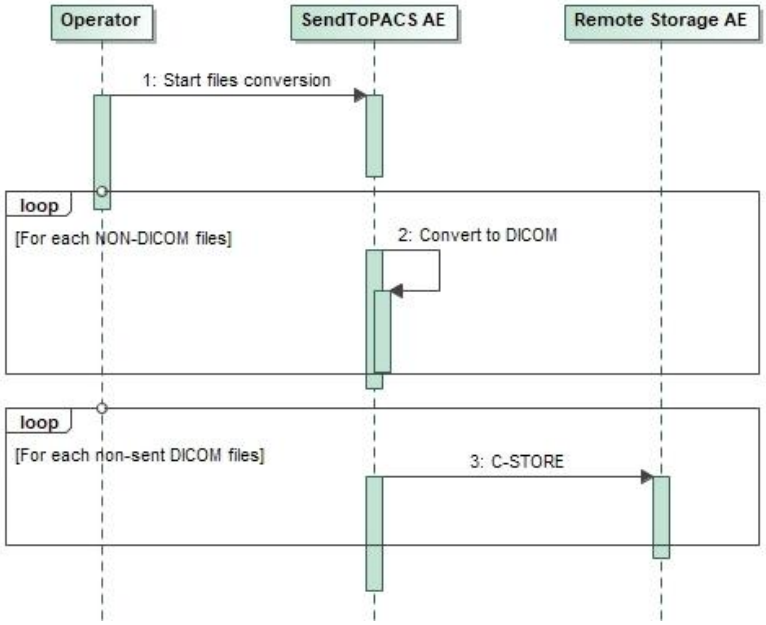

Figure 3. Storing images to Remote AE

4.2.2.3.1.2 Proposed Presentation Contexts

Table 9. Proposed Presentation Contexts for Storage Client AE

Abstract Syntax		Transfer Syntax		Role	Ext. Neg.
Name	**UID**	**Name List**	**UID List**		
Computed Radiography Image Storage	1.2.840.10008.5.1.4.1.1.1	Transfer Syntaxes for Storage Services (see Table 10)		SCU	None
Digital X-Ray Image Storage - For Presentation	1.2.840.10008.5.1.4.1.1.1.1	Transfer Syntaxes for Storage Services (see Table 10)		SCU	None
Digital X-Ray Image Storage - For Processing	1.2.840.10008.5.1.4.1.1.1.1.1	Transfer Syntaxes for Storage Services (see Table 10)		SCU	None
Digital Mammography X-Ray Image Storage - For Presentation	1.2.840.10008.5.1.4.1.1.1.2	Transfer Syntaxes for Storage Services (see Table 10)		SCU	None
Digital Mammography X-Ray Image Storage - For Processing	1.2.840.10008.5.1.4.1.1.1.2.1	Transfer Syntaxes for Storage Services (see Table 10)		SCU	None
Digital Intra-Oral X-Ray Image Storage - For Presentation	1.2.840.10008.5.1.4.1.1.1.3	Transfer Syntaxes for Storage Services (see Table 10)		SCU	None
Digital Intra-Oral X-Ray Image Storage - For Processing	1.2.840.10008.5.1.4.1.1.1.3.1	Transfer Syntaxes for Storage Services (see Table 10)		SCU	None
CT Image Storage	1.2.840.10008.5.1.4.1.1.2	Transfer Syntaxes for Storage Services (see Table 10)		SCU	None
Enhanced CT Image Storage	1.2.840.10008.5.1.4.1.1.2.1	Transfer Syntaxes for Storage Services (see Table 10)		SCU	None
Legacy Converted Enhanced CT Image Storage	1.2.840.10008.5.1.4.1.1.2.2	Transfer Syntaxes for Storage Services (see Table 10)		SCU	None
Ultrasound Multi-frame Image Storage (Retired)	1.2.840.10008.5.1.4.1.1.3	Transfer Syntaxes for Storage Services (see Table 10)		SCU	None
Ultrasound Multi-frame Image Storage	1.2.840.10008.5.1.4.1.1.3.1	Transfer Syntaxes for Storage Services (see Table 10)		SCU	None
MR Image Storage	1.2.840.10008.5.1.4.1.1.4	Transfer Syntaxes for Storage Services (see Table 10)		SCU	None
Enhanced MR Image Storage	1.2.840.10008.5.1.4.1.1.4.1	Transfer Syntaxes for Storage Services (see Table 10)		SCU	None
MR Spectroscopy Storage	1.2.840.10008.5.1.4.1.1.4.2	Transfer Syntaxes for Storage Services (see Table 10)		SCU	None
Enhanced MR Color Image Storage	1.2.840.10008.5.1.4.1.1.4.3	Transfer Syntaxes for Storage Services (see Table 10)		SCU	None
Legacy Converted Enhanced MR Image Storage	1.2.840.10008.5.1.4.1.1.4.4	Transfer Syntaxes for Storage Services (see Table 10)		SCU	None
Nuclear Medicine Image Storage (Retired)	1.2.840.10008.5.1.4.1.1.5	Transfer Syntaxes for Storage Services (see Table 10)		SCU	None
Ultrasound Image Storage (Retired)	1.2.840.10008.5.1.4.1.1.6	Transfer Syntaxes for Storage Services (see Table 10)		SCU	None
Ultrasound Image Storage	1.2.840.10008.5.1.4.1.1.6.1	Transfer Syntaxes for Storage Services (see Table 10)		SCU	None
Enhanced US Volume Storage	1.2.840.10008.5.1.4.1.1.6.2	Transfer Syntaxes for Storage Services (see Table 10)		SCU	None
Secondary Capture Image Storage	1.2.840.10008.5.1.4.1.1.7	Transfer Syntaxes for Storage Services (see Table 23)		SCU	None

Multi-frame Single Bit Secondary Capture Image Storage	1.2.840.10008.5.1.4.1.1.7.1	Transfer Syntaxes for Storage Services (see Table 10)	SCU	None
Multi-frame Grayscale Byte Secondary Capture Image Storage	1.2.840.10008.5.1.4.1.1.7.2	Transfer Syntaxes for Storage Services (see Table 10)	SCU	None
Multi-frame Grayscale Word Secondary Capture Image Storage	1.2.840.10008.5.1.4.1.1.7.3	Transfer Syntaxes for Storage Services (see Table 10)	SCU	None
Multi-frame True Color Secondary Capture Image Storage	1.2.840.10008.5.1.4.1.1.7.4	Transfer Syntaxes for Storage Services (see Table 10)	SCU	None
Standalone Overlay Storage (Retired)	1.2.840.10008.5.1.4.1.1.8	Transfer Syntaxes for Storage Services (see Table 10)	SCU	None
Standalone Curve Storage (Retired)	1.2.840.10008.5.1.4.1.1.9	Transfer Syntaxes for Storage Services (see Table 10)	SCU	None
Waveform Storage - Trial (Retired)	1.2.840.10008.5.1.4.1.1.9.1	Transfer Syntaxes for Storage Services (see Table 10)	SCU	None
12-lead ECG Waveform Storage	1.2.840.10008.5.1.4.1.1.9.1.1	Transfer Syntaxes for Storage Services (see Table 10)	SCU	None
General ECG Waveform Storage	1.2.840.10008.5.1.4.1.1.9.1.2	Transfer Syntaxes for Storage Services (see Table 10)	SCU	None
Ambulatory ECG Waveform Storage	1.2.840.10008.5.1.4.1.1.9.1.3	Transfer Syntaxes for Storage Services (see Table 10)	SCU	None
Hemodynamic Waveform Storage	1.2.840.10008.5.1.4.1.1.9.2.1	Transfer Syntaxes for Storage Services (see Table 10)	SCU	None
Cardiac Electrophysiology Waveform Storage	1.2.840.10008.5.1.4.1.1.9.3.1	Transfer Syntaxes for Storage Services (see Table 10)	SCU	None
Basic Voice Audio Waveform Storage	1.2.840.10008.5.1.4.1.1.9.4.1	Transfer Syntaxes for Storage Services (see Table 10)	SCU	None
General Audio Waveform Storage	1.2.840.10008.5.1.4.1.1.9.4.2	Transfer Syntaxes for Storage Services (see Table 10)	SCU	None
Arterial Pulse Waveform Storage	1.2.840.10008.5.1.4.1.1.9.5.1	Transfer Syntaxes for Storage Services (see Table 10)	SCU	None
Respiratory Waveform Storage	1.2.840.10008.5.1.4.1.1.9.6.1	Transfer Syntaxes for Storage Services (see Table 10)	SCU	None
Multi-channel Respiratory Waveform Storage	1.2.840.10008.5.1.4.1.1.9.6.2	Transfer Syntaxes for Storage Services (see Table 10)	SCU	None
Routine Scalp Electroencephalogram Waveform Storage	1.2.840.10008.5.1.4.1.1.9.7.1	Transfer Syntaxes for Storage Services (see Table 10)	SCU	None
Electromyogram Waveform Storage	1.2.840.10008.5.1.4.1.1.9.7.2	Transfer Syntaxes for Storage Services (see Table 10)	SCU	None
Electrooculogram Waveform Storage	1.2.840.10008.5.1.4.1.1.9.7.3	Transfer Syntaxes for Storage Services (see Table 10)	SCU	None
Sleep Electroencephalogram Waveform Storage	1.2.840.10008.5.1.4.1.1.9.7.4	Transfer Syntaxes for Storage Services (see Table 10)	SCU	None
Body Position Waveform Storage	1.2.840.10008.5.1.4.1.1.9.8.1	Transfer Syntaxes for Storage Services (see Table 10)	SCU	None
Standalone Modality LUT Storage (Retired)	1.2.840.10008.5.1.4.1.1.10	Transfer Syntaxes for Storage Services (see Table 10)	SCU	None
Standalone VOI LUT Storage (Retired)	1.2.840.10008.5.1.4.1.1.11	Transfer Syntaxes for Storage Services (see Table 10)	SCU	None

Grayscale Softcopy Presentation State Storage	1.2.840.10008.5.1.4.1.1.11.1	Transfer Syntaxes for Storage Services (see Table 10)	SCU	None
Color Softcopy Presentation State Storage	1.2.840.10008.5.1.4.1.1.11.2	Transfer Syntaxes for Storage Services (see Table 10)	SCU	None
Pseudo-Color Softcopy Presentation State Storage	1.2.840.10008.5.1.4.1.1.11.3	Transfer Syntaxes for Storage Services (see Table 10)	SCU	None
Blending Softcopy Presentation State Storage	1.2.840.10008.5.1.4.1.1.11.4	Transfer Syntaxes for Storage Services (see Table 10)	SCU	None
XA/XRF Grayscale Softcopy Presentation State Storage	1.2.840.10008.5.1.4.1.1.11.5	Transfer Syntaxes for Storage Services (see Table 10)	SCU	None
Grayscale Planar MPR Volumetric Presentation State Storage	1.2.840.10008.5.1.4.1.1.11.6	Transfer Syntaxes for Storage Services (see Table 10)	SCU	None
Compositing Planar MPR Volumetric Presentation State Storage	1.2.840.10008.5.1.4.1.1.11.7	Transfer Syntaxes for Storage Services (see Table 10)	SCU	None
Advanced Blending Presentation State Storage	1.2.840.10008.5.1.4.1.1.11.8	Transfer Syntaxes for Storage Services (see Table 10)	SCU	None
Volume Rendering Volumetric Presentation State Storage	1.2.840.10008.5.1.4.1.1.11.9	Transfer Syntaxes for Storage Services (see Table 10)	SCU	None
Segmented Volume Rendering Volumetric Presentation State Storage	1.2.840.10008.5.1.4.1.1.11.10	Transfer Syntaxes for Storage Services (see Table 10)	SCU	None
Multiple Volume Rendering Volumetric Presentation State Storage	1.2.840.10008.5.1.4.1.1.11.11	Transfer Syntaxes for Storage Services (see Table 10)	SCU	None
X-Ray Angiographic Image Storage	1.2.840.10008.5.1.4.1.1.12.1	Transfer Syntaxes for Storage Services (see Table 10)	SCU	None
Enhanced XA Image Storage	1.2.840.10008.5.1.4.1.1.12.1.1	Transfer Syntaxes for Storage Services (see Table 10)	SCU	None
X-Ray Radiofluoroscopic Image Storage	1.2.840.10008.5.1.4.1.1.12.2	Transfer Syntaxes for Storage Services (see Table 10)	SCU	None
Enhanced XRF Image Storage	1.2.840.10008.5.1.4.1.1.12.2.1	Transfer Syntaxes for Storage Services (see Table 10)	SCU	None
X-Ray Angiographic Bi-Plane Image Storage (Retired)	1.2.840.10008.5.1.4.1.1.12.3	Transfer Syntaxes for Storage Services (see Table 10)	SCU	None
X-Ray 3D Angiographic Image StorageX-Ray 3D Craniofacial Image Storage	1.2.840.10008.5.1.4.1.1.13.1.11.2.840.10008.5.1.4.1.1.13.1.2	Transfer Syntaxes for Storage Services (see Table 10)	SCU	None
Breast Tomosynthesis Image Storage	1.2.840.10008.5.1.4.1.1.13.1.3	Transfer Syntaxes for Storage Services (see Table 10)	SCU	None
Breast Projection X-Ray Image Storage - For Presentation	1.2.840.10008.5.1.4.1.1.13.1.4	Transfer Syntaxes for Storage Services (see Table 10)	SCU	None
Breast Projection X-Ray Image Storage - For Processing	1.2.840.10008.5.1.4.1.1.13.1.5	Transfer Syntaxes for Storage Services (see Table 10)	SCU	None
Intravascular Optical Coherence Tomography Image Storage - For Presentation	1.2.840.10008.5.1.4.1.1.14.1	Transfer Syntaxes for Storage Services (see Table 10)	SCU	None
Intravascular Optical Coherence Tomography Image Storage - For Processing	1.2.840.10008.5.1.4.1.1.14.2	Transfer Syntaxes for Storage Services (see Table 10)	SCU	None
Nuclear Medicine Image Storage	1.2.840.10008.5.1.4.1.1.20	Transfer Syntaxes for Storage Services (see Table 10)	SCU	None

Parametric Map Storage	1.2.840.10008.5.1.4.1.1.30	Transfer Syntaxes for Storage Services (see Table 10)	SCU	None
MR Image Storage Zero Padded (Retired)	1.2.840.10008.5.1.4.1.1.40	Transfer Syntaxes for Storage Services (see Table 10)	SCU	None
Raw Data Storage	1.2.840.10008.5.1.4.1.1.66	Transfer Syntaxes for Storage Services (see Table 10)	SCU	None
Spatial Registration Storage	1.2.840.10008.5.1.4.1.1.66.1	Transfer Syntaxes for Storage Services (see Table 10)	SCU	None
Spatial Fiducials Storage	1.2.840.10008.5.1.4.1.1.66.2	Transfer Syntaxes for Storage Services (see Table 10)	SCU	None
Deformable Spatial Registration Storage	1.2.840.10008.5.1.4.1.1.66.3	Transfer Syntaxes for Storage Services (see Table 10)	SCU	None
Segmentation Storage	1.2.840.10008.5.1.4.1.1.66.4	Transfer Syntaxes for Storage Services (see Table 10)	SCU	None
Surface Segmentation Storage	1.2.840.10008.5.1.4.1.1.66.5	Transfer Syntaxes for Storage Services (see Table 10)	SCU	None
Tractography Results Storage	1.2.840.10008.5.1.4.1.1.66.6	Transfer Syntaxes for Storage Services (see Table 10)	SCU	None
Real World Value Mapping Storage	1.2.840.10008.5.1.4.1.1.67	Transfer Syntaxes for Storage Services (see Table 10)	SCU	None
Surface Scan Mesh Storage	1.2.840.10008.5.1.4.1.1.68.1	Transfer Syntaxes for Storage Services (see Table 10)	SCU	None
Surface Scan Point Cloud Storage	1.2.840.10008.5.1.4.1.1.68.2	Transfer Syntaxes for Storage Services (see Table 10)	SCU	None
VL Image Storage - Trial (Retired)	1.2.840.10008.5.1.4.1.1.77.1	Transfer Syntaxes for Storage Services (see Table 10)	SCU	None
VL Multi-frame Image Storage - Trial (Retired)	1.2.840.10008.5.1.4.1.1.77.2	Transfer Syntaxes for Storage Services (see Table 10)	SCU	None
VL Endoscopic Image Storage	1.2.840.10008.5.1.4.1.1.77.1.1	Transfer Syntaxes for Storage Services (see Table 10)	SCU	None
Video Endoscopic Image Storage	1.2.840.10008.5.1.4.1.1.77.1.1.1	Transfer Syntaxes for Storage Services (see Table 10)	SCU	None
VL Microscopic Image Storage	1.2.840.10008.5.1.4.1.1.77.1.2	Transfer Syntaxes for Storage Services (see Table 10)	SCU	None
Video Microscopic Image Storage	1.2.840.10008.5.1.4.1.1.77.1.2.1	Transfer Syntaxes for Storage Services (see Table 10)	SCU	None
VL Slide-Coordinates Microscopic Image Storage	1.2.840.10008.5.1.4.1.1.77.1.3	Transfer Syntaxes for Storage Services (see Table 10)	SCU	None
VL Photographic Image Storage	1.2.840.10008.5.1.4.1.1.77.1.4	Transfer Syntaxes for Storage Services (see Table 10)	SCU	None
Video Photographic Image Storage	1.2.840.10008.5.1.4.1.1.77.1.4.1	Transfer Syntaxes for Storage Services (see Table 10)	SCU	None
Ophthalmic Photography 8 Bit Image Storage	1.2.840.10008.5.1.4.1.1.77.1.5.1	Transfer Syntaxes for Storage Services (see Table 10)	SCU	None
Ophthalmic Photography 16 Bit Image Storage	1.2.840.10008.5.1.4.1.1.77.1.5.2	Transfer Syntaxes for Storage Services (see Table 10)	SCU	None
Stereometric Relationship Storage	1.2.840.10008.5.1.4.1.1.77.1.5.3	Transfer Syntaxes for Storage Services (see Table 10)	SCU	None
Ophthalmic Tomography Image Storage	1.2.840.10008.5.1.4.1.1.77.1.5.4	Transfer Syntaxes for Storage Services (see Table 10)	SCU	None
Wide Field Ophthalmic Photography Stereographic Projection Image Storage	1.2.840.10008.5.1.4.1.1.77.1.5.5	Transfer Syntaxes for Storage Services (see Table 10)	SCU	None

Wide Field Ophthalmic Photography 3D Coordinates Image Storage	1.2.840.10008.5.1.4.1.1.77.1.5.6	Transfer Syntaxes for Storage Services (see Table 10)	SCU	None
Ophthalmic Optical Coherence Tomography En Face Image Storage	1.2.840.10008.5.1.4.1.1.77.1.5.7	Transfer Syntaxes for Storage Services (see Table 10)	SCU	None
Ophthalmic Optical Coherence Tomography B-scan Volume Analysis Storage	1.2.840.10008.5.1.4.1.1.77.1.5.8	Transfer Syntaxes for Storage Services (see Table 10)	SCU	None
VL Whole Slide Microscopy Image Storage	1.2.840.10008.5.1.4.1.1.77.1.6	Transfer Syntaxes for Storage Services (see Table 10)	SCU	None
Dermoscopic Photography Image Storage	1.2.840.10008.5.1.4.1.1.77.1.7	Transfer Syntaxes for Storage Services (see Table 10)	SCU	None
Lensometry Measurements Storage	1.2.840.10008.5.1.4.1.1.78.1	Transfer Syntaxes for Storage Services (see Table 10)	SCU	None
Autorefraction Measurements Storage	1.2.840.10008.5.1.4.1.1.78.2	Transfer Syntaxes for Storage Services (see Table 10)	SCU	None
Keratometry Measurements Storage	1.2.840.10008.5.1.4.1.1.78.3	Transfer Syntaxes for Storage Services (see Table 10)	SCU	None
Subjective Refraction Measurements Storage	1.2.840.10008.5.1.4.1.1.78.4	Transfer Syntaxes for Storage Services (see Table 10)	SCU	None
Visual Acuity Measurements Storage	1.2.840.10008.5.1.4.1.1.78.5	Transfer Syntaxes for Storage Services (see Table 10)	SCU	None
Spectacle Prescription Report Storage	1.2.840.10008.5.1.4.1.1.78.6	Transfer Syntaxes for Storage Services (see Table 10)	SCU	None
Ophthalmic Axial Measurements Storage	1.2.840.10008.5.1.4.1.1.78.7	Transfer Syntaxes for Storage Services (see Table 10)	SCU	None
Intraocular Lens Calculations Storage	1.2.840.10008.5.1.4.1.1.78.8	Transfer Syntaxes for Storage Services (see Table 10)	SCU	None
Macular Grid Thickness and Volume Report Storage	1.2.840.10008.5.1.4.1.1.79.1	Transfer Syntaxes for Storage Services (see Table 10)	SCU	None
Ophthalmic Visual Field Static Perimetry Measurements Storage	1.2.840.10008.5.1.4.1.1.80.1	Transfer Syntaxes for Storage Services (see Table 10)	SCU	None
Ophthalmic Thickness Map Storage	1.2.840.10008.5.1.4.1.1.81.1	Transfer Syntaxes for Storage Services (see Table 10)	SCU	None
Corneal Topography Map Storage	1.2.840.10008.5.1.4.1.1.82.1	Transfer Syntaxes for Storage Services (see Table 10)	SCU	None
Text SR Storage - Trial (Retired)	1.2.840.10008.5.1.4.1.1.88.1	Transfer Syntaxes for Storage Services (see Table 10)	SCU	None
Audio SR Storage - Trial (Retired)	1.2.840.10008.5.1.4.1.1.88.2	Transfer Syntaxes for Storage Services (see Table 10)	SCU	None
Detail SR Storage - Trial (Retired)	1.2.840.10008.5.1.4.1.1.88.3	Transfer Syntaxes for Storage Services (see Table 10)	SCU	None
Comprehensive SR Storage - Trial (Retired)	1.2.840.10008.5.1.4.1.1.88.4	Transfer Syntaxes for Storage Services (see Table 10)	SCU	None
Basic Text SR Storage	1.2.840.10008.5.1.4.1.1.88.11	Transfer Syntaxes for Storage Services (see Table 10)	SCU	None
Enhanced SR Storage	1.2.840.10008.5.1.4.1.1.88.22	Transfer Syntaxes for Storage Services (see Table 10)	SCU	None
Comprehensive SR Storage	1.2.840.10008.5.1.4.1.1.88.33	Transfer Syntaxes for Storage Services (see Table 10)	SCU	None

Comprehensive 3D SR Storage	1.2.840.10008.5.1.4.1.1.88.34	Transfer Syntaxes for Storage Services (see Table 10)	SCU	None
Extensible SR Storage	1.2.840.10008.5.1.4.1.1.88.35	Transfer Syntaxes for Storage Services (see Table 10)	SCU	None
Procedure Log Storage	1.2.840.10008.5.1.4.1.1.88.40	Transfer Syntaxes for Storage Services (see Table 10)	SCU	None
Mammography CAD SR Storage	1.2.840.10008.5.1.4.1.1.88.50	Transfer Syntaxes for Storage Services (see Table 10)	SCU	None
Key Object Selection Document Storage	1.2.840.10008.5.1.4.1.1.88.59	Transfer Syntaxes for Storage Services (see Table 10)	SCU	None
Chest CAD SR Storage	1.2.840.10008.5.1.4.1.1.88.65	Transfer Syntaxes for Storage Services (see Table 10)	SCU	None
X-Ray Radiation Dose SR Storage	1.2.840.10008.5.1.4.1.1.88.67	Transfer Syntaxes for Storage Services (see Table 10)	SCU	None
Radiopharmaceutical Radiation Dose SR Storage	1.2.840.10008.5.1.4.1.1.88.68	Transfer Syntaxes for Storage Services (see Table 10)	SCU	None
Colon CAD SR Storage	1.2.840.10008.5.1.4.1.1.88.69	Transfer Syntaxes for Storage Services (see Table 10)	SCU	None
Implantation Plan SR Storage	1.2.840.10008.5.1.4.1.1.88.70	Transfer Syntaxes for Storage Services (see Table 10)	SCU	None
Acquisition Context SR Storage	1.2.840.10008.5.1.4.1.1.88.71	Transfer Syntaxes for Storage Services (see Table 10)	SCU	None
Simplified Adult Echo SR Storage	1.2.840.10008.5.1.4.1.1.88.72	Transfer Syntaxes for Storage Services (see Table 10)	SCU	None
Patient Radiation Dose SR Storage	1.2.840.10008.5.1.4.1.1.88.73	Transfer Syntaxes for Storage Services (see Table 10)	SCU	None
Planned Imaging Agent Administration SR Storage	1.2.840.10008.5.1.4.1.1.88.74	Transfer Syntaxes for Storage Services (see Table 10)	SCU	None
Performed Imaging Agent Administration SR Storage	1.2.840.10008.5.1.4.1.1.88.75	Transfer Syntaxes for Storage Services (see Table 10)	SCU	None
Content Assessment Results Storage	1.2.840.10008.5.1.4.1.1.90.1	Transfer Syntaxes for Storage Services (see Table 10)	SCU	None
Encapsulated PDF Storage	1.2.840.10008.5.1.4.1.1.104.1	Transfer Syntaxes for Storage Services (see Table 10)	SCU	None
Encapsulated CDA Storage	1.2.840.10008.5.1.4.1.1.104.2	Transfer Syntaxes for Storage Services (see Table 10)	SCU	None
Encapsulated STL Storage	1.2.840.10008.5.1.4.1.1.104.3	Transfer Syntaxes for Storage Services (see Table 10)	SCU	None
Encapsulated OBJ Storage	1.2.840.10008.5.1.4.1.1.104.4	Transfer Syntaxes for Storage Services (see Table 10)	SCU	None
Encapsulated MTL Storage	1.2.840.10008.5.1.4.1.1.104.5	Transfer Syntaxes for Storage Services (see Table 10)	SCU	None
Positron Emission Tomography Image Storage	1.2.840.10008.5.1.4.1.1.128	Transfer Syntaxes for Storage Services (see Table 10)	SCU	None
Legacy Converted Enhanced PET Image Storage	1.2.840.10008.5.1.4.1.1.128.1	Transfer Syntaxes for Storage Services (see Table 10)	SCU	None
Standalone PET Curve Storage (Retired)	1.2.840.10008.5.1.4.1.1.129	Transfer Syntaxes for Storage Services (see Table 10)	SCU	None
Enhanced PET Image Storage	1.2.840.10008.5.1.4.1.1.130	Transfer Syntaxes for Storage Services (see Table 10)	SCU	None
Basic Structured Display Storage	1.2.840.10008.5.1.4.1.1.131	Transfer Syntaxes for Storage Services (see Table 10)	SCU	None

CT Defined Procedure Protocol Storage	1.2.840.10008.5.1.4.1.1.200.1	Transfer Syntaxes for Storage Services (see Table 10)	SCU	None
CT Performed Procedure Protocol Storage	1.2.840.10008.5.1.4.1.1.200.2	Transfer Syntaxes for Storage Services (see Table 10)	SCU	None
RT Image Storage	1.2.840.10008.5.1.4.1.1.481.1	Transfer Syntaxes for Storage Services (see Table 10)	SCU	None
RT Dose Storage	1.2.840.10008.5.1.4.1.1.481.2	Transfer Syntaxes for Storage Services (see Table 10)	SCU	None
RT Structure Set Storage	1.2.840.10008.5.1.4.1.1.481.3	Transfer Syntaxes for Storage Services (see Table 10)	SCU	None
RT Beams Treatment Record Storage	1.2.840.10008.5.1.4.1.1.481.4	Transfer Syntaxes for Storage Services (see Table 10)	SCU	None
RT Plan Storage	1.2.840.10008.5.1.4.1.1.481.5	Transfer Syntaxes for Storage Services (see Table 10)	SCU	None
RT Brachy Treatment Record Storage	1.2.840.10008.5.1.4.1.1.481.6	Transfer Syntaxes for Storage Services (see Table 10)	SCU	None
RT Treatment Summary Record Storage	1.2.840.10008.5.1.4.1.1.481.7	Transfer Syntaxes for Storage Services (see Table 10)	SCU	None
RT Ion Plan Storage	1.2.840.10008.5.1.4.1.1.481.8	Transfer Syntaxes for Storage Services (see Table 10)	SCU	None
RT Ion Beams Treatment Record Storage	1.2.840.10008.5.1.4.1.1.481.9	Transfer Syntaxes for Storage Services (see Table 10)	SCU	None
RT Physician Intent Storage	1.2.840.10008.5.1.4.1.1.481.10	Transfer Syntaxes for Storage Services (see Table 10)	SCU	None
RT Segment Annotation Storage	1.2.840.10008.5.1.4.1.1.481.11	Transfer Syntaxes for Storage Services (see Table 10)	SCU	None
RT Radiation Set Storage	1.2.840.10008.5.1.4.1.1.481.12	Transfer Syntaxes for Storage Services (see Table 10)	SCU	None
C-Arm Photon-Electron Radiation Storage	1.2.840.10008.5.1.4.1.1.481.13	Transfer Syntaxes for Storage Services (see Table 10)	SCU	None
Tomotherapeutic Radiation Storage	1.2.840.10008.5.1.4.1.1.481.14	Transfer Syntaxes for Storage Services (see Table 10)	SCU	None
Robotic-Arm Radiation Storage	1.2.840.10008.5.1.4.1.1.481.15	Transfer Syntaxes for Storage Services (see Table 10)	SCU	None
RT Radiation Record Set Storage	1.2.840.10008.5.1.4.1.1.481.16	Transfer Syntaxes for Storage Services (see Table 10)	SCU	None
RT Radiation Salvage Record Storage	1.2.840.10008.5.1.4.1.1.481.17	Transfer Syntaxes for Storage Services (see Table 10)	SCU	None
Tomotherapeutic Radiation Record Storage	1.2.840.10008.5.1.4.1.1.481.18	Transfer Syntaxes for Storage Services (see Table 10)	SCU	None
C-Arm Photon-Electron Radiation Record Storage	1.2.840.10008.5.1.4.1.1.481.19	Transfer Syntaxes for Storage Services (see Table 10)	SCU	None
Robotic Radiation Record Storage	1.2.840.10008.5.1.4.1.1.481.20	Transfer Syntaxes for Storage Services (see Table 10)	SCU	None
DICOS CT Image Storage	1.2.840.10008.5.1.4.1.1.501.1	Transfer Syntaxes for Storage Services (see Table 10)	SCU	None
DICOS Digital X-Ray Image Storage - For Presentation	1.2.840.10008.5.1.4.1.1.501.2.1	Transfer Syntaxes for Storage Services (see Table 10)	SCU	None
DICOS Digital X-Ray Image Storage - For Processing	1.2.840.10008.5.1.4.1.1.501.2.2	Transfer Syntaxes for Storage Services (see Table 10)	SCU	None
DICOS Threat Detection Report Storage	1.2.840.10008.5.1.4.1.1.501.3	Transfer Syntaxes for Storage Services (see Table 10)	SCU	None

DICOS 2D AIT Storage	1.2.840.10008.5.1.4.1.1.501.4	Transfer Syntaxes for Storage Services (see Table 10)	SCU	None
DICOS 3D AIT Storage	1.2.840.10008.5.1.4.1.1.501.5	Transfer Syntaxes for Storage Services (see Table 10)	SCU	None
DICOS Quadrupole Resonance (QR) Storage	1.2.840.10008.5.1.4.1.1.501.6	Transfer Syntaxes for Storage Services (see Table 10)	SCU	None
Eddy Current Image Storage	1.2.840.10008.5.1.4.1.1.601.1	Transfer Syntaxes for Storage Services (see Table 10)	SCU	None
Eddy Current Multi-frame Image Storage	1.2.840.10008.5.1.4.1.1.601.2	Transfer Syntaxes for Storage Services (see Table 10)	SCU	None
RT Beams Delivery Instruction Storage - Trial (Retired)	1.2.840.10008.5.1.4.34.1	Transfer Syntaxes for Storage Services (see Table 10)	SCU	None
RT Conventional Machine Verification - Trial (Retired)	1.2.840.10008.5.1.4.34.2	Transfer Syntaxes for Storage Services (see Table 10)	SCU	None
RT Ion Machine Verification - Trial (Retired)	1.2.840.10008.5.1.4.34.3	Transfer Syntaxes for Storage Services (see Table 10)	SCU	None
RT Beams Delivery Instruction Storage	1.2.840.10008.5.1.4.34.7	Transfer Syntaxes for Storage Services (see Table 10)	SCU	None
RT Brachy Application Setup Delivery Instruction Storage	1.2.840.10008.5.1.4.34.10	Transfer Syntaxes for Storage Services (see Table 10)	SCU	None
Hanging Protocol Storage	1.2.840.10008.5.1.4.38.1	Transfer Syntaxes for Storage Services (see Table 10)	SCU	None
Color Palette Storage	1.2.840.10008.5.1.4.39.1	Transfer Syntaxes for Storage Services (see Table 10)	SCU	None
Generic Implant Template Storage	1.2.840.10008.5.1.4.43.1	Transfer Syntaxes for Storage Services (see Table 10)	SCU	None
Implant Assembly Template Storage	1.2.840.10008.5.1.4.44.1	Transfer Syntaxes for Storage Services (see Table 10)	SCU	None
Implant Template Group Storage	1.2.840.10008.5.1.4.45.1	Transfer Syntaxes for Storage Services (see Table 10)	SCU	None
Private TomTec Annotation Storage	1.2.276.0.48.5.1.4.1.1.7	Transfer Syntaxes for Storage Services (see Table 10)	SCU	None
Private Toshiba US Image Storage	1.2.392.200036.9116.7.8.1.1.1	Transfer Syntaxes for Storage Services (see Table 10)	SCU	None
Private Fuji CR Image Storage	1.2.392.200036.9125.1.1.2	Transfer Syntaxes for Storage Services (see Table 10)	SCU	None
Private GE Collage Storage	1.2.528.1.1001.5.1.1.1	Transfer Syntaxes for Storage Services (see Table 10)	SCU	None
Private ERAD Practice Builder Report Text Storage	1.2.826.0.1.3680043.293.1.0.1	Transfer Syntaxes for Storage Services (see Table 10)	SCU	None
Private ERAD Practice Builder Report Dictation Storage	1.2.826.0.1.3680043.293.1.0.2	Transfer Syntaxes for Storage Services (see Table 10)	SCU	None
Private Philips HP Live 3D 01 Storage	1.2.840.113543.6.6.1.3.10001	Transfer Syntaxes for Storage Services (see Table 10)	SCU	None
Private Philips HP Live 3D 02 Storage	1.2.840.113543.6.6.1.3.10002	Transfer Syntaxes for Storage Services (see Table 10)	SCU	None
Private GE 3D Model Storage	1.2.840.113619.4.26	Transfer Syntaxes for Storage Services (see Table 10)	SCU	None
Private GE PET Raw Data Storage	1.2.840.113619.4.30	Transfer Syntaxes for Storage Services (see Table 10)	SCU	None
Private GE RT Plan Storage	1.2.840.113619.4.5.249	Transfer Syntaxes for Storage Services (see Table 10)	SCU	None

Private PixelMed Legacy Converted Enhanced CT Image Storage	1.3.6.1.4.1.5962.301.1	Transfer Syntaxes for Storage Services (see Table 10)	SCU	None
Private PixelMed Legacy Converted Enhanced MR Image Storage	1.3.6.1.4.1.5962.301.2	Transfer Syntaxes for Storage Services (see Table 10)	SCU	None
Private PixelMed Legacy Converted Enhanced PET Image Storage	1.3.6.1.4.1.5962.301.3	Transfer Syntaxes for Storage Services (see Table 10)	SCU	None
Private PixelMed Floating Point Image Storage	1.3.6.1.4.1.5962.301.9	Transfer Syntaxes for Storage Services (see Table 10)	SCU	None
Private Siemens CSA Non Image Storage	1.3.12.2.1107.5.9.1	Transfer Syntaxes for Storage Services (see Table 10)	SCU	None
Private Siemens CT MR Volume Storage	1.3.12.2.1107.5.99.3.10	Transfer Syntaxes for Storage Services (see Table 10)	SCU	None
Private Siemens AX Frame Sets Storage	1.3.12.2.1107.5.99.3.11	Transfer Syntaxes for Storage Services (see Table 10)	SCU	None
Private Philips Specialised XA Storage	1.3.46.670589.2.3.1.1	Transfer Syntaxes for Storage Services (see Table 10)	SCU	None
Private Philips CX Image Storage	1.3.46.670589.2.4.1.1	Transfer Syntaxes for Storage Services (see Table 10)	SCU	None
Private Philips 3D Presentation State Storage	1.3.46.670589.2.5.1.1	Transfer Syntaxes for Storage Services (see Table 10)	SCU	None
Private Philips VRML Storage	1.3.46.670589.2.8.1.1	Transfer Syntaxes for Storage Services (see Table 10)	SCU	None
Private Philips Volume Set Storage	1.3.46.670589.2.11.1.1	Transfer Syntaxes for Storage Services (see Table 10)	SCU	None
Private Philips Volume Storage (Retired)	1.3.46.670589.5.0.1	Transfer Syntaxes for Storage Services (see Table 10)	SCU	None
Private Philips Volume Storage	1.3.46.670589.5.0.1.1	Transfer Syntaxes for Storage Services (see Table 10)	SCU	None
Private Philips 3D Object Storage (Retired)	1.3.46.670589.5.0.2	Transfer Syntaxes for Storage Services (see Table 10)	SCU	None
Private Philips 3D Object Storage	1.3.46.670589.5.0.2.1	Transfer Syntaxes for Storage Services (see Table 10)	SCU	None
Private Philips Surface Storage (Retired)	1.3.46.670589.5.0.3	Transfer Syntaxes for Storage Services (see Table 10)	SCU	None
Private Philips Surface Storage	1.3.46.670589.5.0.3.1	Transfer Syntaxes for Storage Services (see Table 10)	SCU	None
Private Philips Composite Object Storage	1.3.46.670589.5.0.4	Transfer Syntaxes for Storage Services (see Table 10)	SCU	None
Private Philips MR Cardio Profile Storage	1.3.46.670589.5.0.7	Transfer Syntaxes for Storage Services (see Table 10)	SCU	None
Private Philips MR Cardio Storage (Retired)	1.3.46.670589.5.0.8	Transfer Syntaxes for Storage Services (see Table 10)	SCU	None
Private Philips MR Cardio Storage	1.3.46.670589.5.0.8.1	Transfer Syntaxes for Storage Services (see Table 10)	SCU	None
Private Philips CT Synthetic Image Storage	1.3.46.670589.5.0.9	Transfer Syntaxes for Storage Services (see Table 10)	SCU	None
Private Philips MR Synthetic Image Storage	1.3.46.670589.5.0.10	Transfer Syntaxes for Storage Services (see Table 10)	SCU	None
Private Philips MR Cardio Analysis Storage (Retired)	1.3.46.670589.5.0.11	Transfer Syntaxes for Storage Services (see Table 10)	SCU	None

Private Philips MR Cardio Analysis Storage	1.3.46.670589.5.0.11.1	Transfer Syntaxes for Storage Services (see Table 10)	SCU	None
Private Philips CX Synthetic Image Storage	1.3.46.670589.5.0.12	Transfer Syntaxes for Storage Services (see Table 10)	SCU	None
Private Philips Perfusion Storage	1.3.46.670589.5.0.13	Transfer Syntaxes for Storage Services (see Table 10)	SCU	None
Private Philips Perfusion Image Storage	1.3.46.670589.5.0.14	Transfer Syntaxes for Storage Services (see Table 10)	SCU	None
Private Philips X-Ray MF Storage	1.3.46.670589.7.8.1618510091	Transfer Syntaxes for Storage Services (see Table 10)	SCU	None
Private Philips Live Run Storage	1.3.46.670589.7.8.1618510092	Transfer Syntaxes for Storage Services (see Table 10)	SCU	None
Private Philips Run Storage	1.3.46.670589.7.8.16185100129	Transfer Syntaxes for Storage Services (see Table 10)	SCU	None
Private Philips Reconstruction Storage	1.3.46.670589.7.8.16185100130	Transfer Syntaxes for Storage Services (see Table 10)	SCU	None
Private Philips MR Spectrum Storage	1.3.46.670589.11.0.0.12.1	Transfer Syntaxes for Storage Services (see Table 10)	SCU	None
Private Philips MR Series Data Storage	1.3.46.670589.11.0.0.12.2	Transfer Syntaxes for Storage Services (see Table 10)	SCU	None
Private Philips MR Color Image Storage	1.3.46.670589.11.0.0.12.3	Transfer Syntaxes for Storage Services (see Table 10)	SCU	None
Private Philips MR Examcard Storage	1.3.46.670589.11.0.0.12.4	Transfer Syntaxes for Storage Services (see Table 10)	SCU	None
Private PMOD Multi-frame Image Storage	2.16.840.1.114033.5.1.4.1.1.130	Transfer Syntaxes for Storage Services (see Table 10)	SCU	None

Table 10. Proposed Transfer Syntaxes for Storage Services

Name	UID
Implicit VR Little Endian [1]	1.2.840.10008.1.2
Explicit VR Little Endian	1.2.840.10008.1.2.1
Deflated Explicit VR Little Endian	1.2.840.10008.1.2.1.99
Explicit VR Big Endian	1.2.840.10008.1.2.2
JPEG Baseline (Process 1)	1.2.840.10008.1.2.4.50
JPEG Extended (Process 2 & 4)	1.2.840.10008.1.2.4.51
JPEG Extended (Process 3 & 5) (Retired)	1.2.840.10008.1.2.4.52
JPEG Spectral Selection, Non-Hierarchical (Process 6 & 8) (Retired)	1.2.840.10008.1.2.4.53
JPEG Spectral Selection, Non-Hierarchical (Process 7 & 9) (Retired)	1.2.840.10008.1.2.4.54
JPEG Full Progression, Non-Hierarchical (Process 10 & 12) (Retired)	1.2.840.10008.1.2.4.55
JPEG Full Progression, Non-Hierarchical (Process 11 & 13) (Retired)	1.2.840.10008.1.2.4.56
JPEG Lossless, Non–Hierarchical (Process 14)	1.2.840.10008.1.2.4.57
JPEG Lossless, Non-Hierarchical (Process 15) (Retired)	1.2.840.10008.1.2.4.58
JPEG Extended, Hierarchical (Process 16 & 18) (Retired)	1.2.840.10008.1.2.4.59
JPEG Extended, Hierarchical (Process 17 & 19) (Retired)	1.2.840.10008.1.2.4.60
JPEG Spectral Selection, Hierarchical (Process 20 & 22) (Retired)	1.2.840.10008.1.2.4.61
JPEG Spectral Selection, Hierarchical (Process 21 & 23) (Retired)	1.2.840.10008.1.2.4.62
JPEG Full Progression, Hierarchical (Process 24 & 26) (Retired)	1.2.840.10008.1.2.4.63

JPEG Full Progression, Hierarchical (Process 25 & 27) (Retired)	1.2.840.10008.1.2.4.64
JPEG Lossless, Hierarchical (Process 28) (Retired)	1.2.840.10008.1.2.4.65
JPEG Lossless, Hierarchical (Process 29) (Retired)	1.2.840.10008.1.2.4.66
JPEG Lossless, Non–Hierarchical, First-Order Prediction (Process 14 [Selection Value 1])	1.2.840.10008.1.2.4.70
JPEG-LS Lossless Image Compression	1.2.840.10008.1.2.4.80
JPEG-LS Lossy (Near–Lossless) Image Compression	1.2.840.10008.1.2.4.81
JPEG 2000 Image Compression (Lossless Only)	1.2.840.10008.1.2.4.90
JPEG 2000 Image Compression	1.2.840.10008.1.2.4.91
JPEG 2000 Part 2 Multi-component Image Compression (Lossless Only)	1.2.840.10008.1.2.4.92
JPEG 2000 Part 2 Multi-component Image Compression	1.2.840.10008.1.2.4.93
JPIP Referenced	1.2.840.10008.1.2.4.94
JPIP Referenced Deflate	1.2.840.10008.1.2.4.95
MPEG–2 Main Profile @ Main Level	1.2.840.10008.1.2.4.100
MPEG–2 Main Profile @ High Level	1.2.840.10008.1.2.4.101
MPEG–4 AVC/H.264 High Profile / Level 4.1	1.2.840.10008.1.2.4.102
MPEG–4 AVC/H.264 BD–compatible High Profile / Level 4.1	1.2.840.10008.1.2.4.103
MPEG–4 AVC/H.264 High Profile / Level 4.2 For 2D Video	1.2.840.10008.1.2.4.104
MPEG–4 AVC/H.264 High Profile / Level 4.2 For 3D Video	1.2.840.10008.1.2.4.105
MPEG–4 AVC/H.264 Stereo High Profile / Level 4.2	1.2.840.10008.1.2.4.106
HEVC/H.265 Main Profile / Level 5.1	1.2.840.10008.1.2.4.107
HEVC/H.265 Main 10 Profile / Level 5.1	1.2.840.10008.1.2.4.108
RLE Lossless	1.2.840.10008.1.2.5
RFC 2557 MIME encapsulation (Retired)	1.2.840.10008.1.2.6.1
XML Encoding (Retired)	1.2.840.10008.1.2.6.2
SMPTE ST 2110-20 Uncompressed Progressive Active Video	1.2.840.10008.1.2.7.1
SMPTE ST 2110-20 Uncompressed Interlaced Active Video	1.2.840.10008.1.2.7.2
SMPTE ST 2110-30 PCM Digital Audio	1.2.840.10008.1.2.7.3

[1] ILE is offered together with each compressed syntax due to a corresponding requirement in the DICOM Standard. However, the Storage Client is incapable of converting between transfer syntaxes. The storage operation will only succeed if the SCP supports the original compressed syntax.

4.2.2.3.1.3 SOP Specific Conformance for Storage SOP Classes

The associated Activity with the Storage Client is the storage of medical DICOM data specified by the operator over the network to the SCP. The Storage Client AE will indicate a failure if it is unable to send any of the specified instances. It always attempts to send all remaining instances despite of failure with a particular one.

During the conversion to DICOM operation, the DICOM instances are created with JPEG Baseline transfer syntax (for image) and one of compressed video syntaxes MPEG–2 or MPEG–4 (conversion support 1.2.840.10008.1.2.4.100, 1.2.840.10008.1.2.4.101, 1.2.840.10008.1.2.4.102, 1.2.840.10008.1.2.4.103) from Table 10.
During the PDF files conversion to DICOM, the DICOM instances are created with Explicit VR Little Endian.
Operator can define other SOP Class UID by file extension (JPG, MP4, PDF), but conversion will be either Secondary Capture Image Storage or Encapsulated PDF Storage IOD.

If the remote Storage SCP returns the compression–related context marked as unsupported, then the Client will abort the Association as it does not perform any transfer syntax conversions, too. **Storage SCPs compatible must support JPEG Baseline (Process 1), a particular compressed video transfer syntax (conversion support 1.2.840.10008.1.2.4.100, 1.2.840.10008.1.2.4.101, 1.2.840.10008.1.2.4.102, 1.2.840.10008.1.2.4.103) from Table 10 and Explicit VR Little Endian.**

Table 11. Storage Client C-STORE Response Status Handling Behavior

Service Status	Further Meaning	Error Code	Behavior
Success	Success	0000	The Composite SOP Instance was successfully received and stored in the system repository by the SCP. Send the next instance.
Warning	Data Element Coercion	B000	The SCP has corrected some Data Element(s) to avoid a conflict. Warning indication message might be copied to the application logs. Assume that the Instance has been stored successfully and send the next instance.
	Elements Discarded	B006	Some Data Element(s) were discarded by the SCP. Warning indication message might be copied to the application logs. Assume that the Instance has been stored successfully and send the next instance.
	Data Set does not match SOP Class	B007	Assume that the SCP has stored the Instance anyway. Warning indication message might be copied to the application logs. Send the next instance.
Error	Others	Others	Any unrecognized Error Code is considered an indication that the Instance wasn't stored. Error indication message might be copied to the application logs and an overall "failure" message will be displayed at the end of the operation. Send the next instance.

4.2.3 Modality Worklist Client Application Entity Specification

4.2.3.1 SOP Classes

Table 12. SOP Classes for Modality Worklist Client AE

SOP Class Name	SOP Class UID	SCU	SCP
Modality Worklist Information Model – FIND	1.2.840.10008.5.1.4.31	Yes	No

4.2.3.2 Associations Policies

4.2.3.2.1 General

At a command from the operator, the Modality Worklist Client AE attempts to establish an association with the specified Remote AE. When the association is established, a C–FIND request is made to retrieve a worklist using the defined matching keys. The Modality Worklist Client waits for any C–FIND response. The established association remains active until a C–FIND response from the remote AE indicates the end of worklist items, or until a timeout period expires.
The Modality Worklist Client AE itself does not accept Associations.
The DICOM standard application context name for DICOM 3.0 is always accepted and proposed:

Table 13. DICOM application context name for Modality Worklist Client AE

Application Context Name	1.2.840.10008.3.1.1.1

4.2.3.2.2 Number of Associations

Only a single Association is active at the moment. The results are displayed to the operator only after receiving them from SCP entirely.

4.2.3.2.3 Asynchronous Nature

The Modality Worklist Client does not support asynchronous communication (multiple outstanding transactions over a single Association).

4.2.3.2.4 Implementation Identifying Information

The implementation information for this Application Entity is:

Table 14. DICOM Implementation Class and Version for Modality Worklist Client AE

Implementation Class UID	1.3.6.1.4.1.44316.3
Implementation Version Name	MDSENDTOPACS

4.2.3.3 Association Initiation Policy

4.2.3.3.1 Activity – Query Modality Worklist

4.2.3.3.1.1 Description and Sequencing of Activity

The Modality Worklist SCU is governed by the WORKLIST configuration and search dialog that provides study and patient data for the next acquisition.
The dialog allows to enter patient ID, patient name (first name or last name, or middle name, or full name separated parts by "^"), date (Scheduled Procedure Step Sequence > scheduled procedure step start date), modality (Scheduled Procedure Step Sequence > Modality), station AE Title (Scheduled Procedure Step Sequence > Scheduled Station AE Title).
From the settings, operator can set scheduled AE Title, modality that will be set as default values in the dialog.
MWL Server AE, that do not return results with specific character set attribute – can set character set from settings (to correct result).
Wildcards (checkbox near input) can be checked to patient ID and patient name search parameters in the same dialog. This automatically will add wildcard symbols "*" at the beginning and the end of search parameter. Some other MWL Servers prohibits wildcard or have other pattern – must uncheck wildcard checkbox and manually add "*" or other wildcard symbols, to the search parameter.
Maximum search result is 1000 items.
After receiving search results, the application updates the list from which an existing patient can be chosen.
The operator can select an entry and press the button at the bottom at the list. This will update patient and study dialog form for further process.

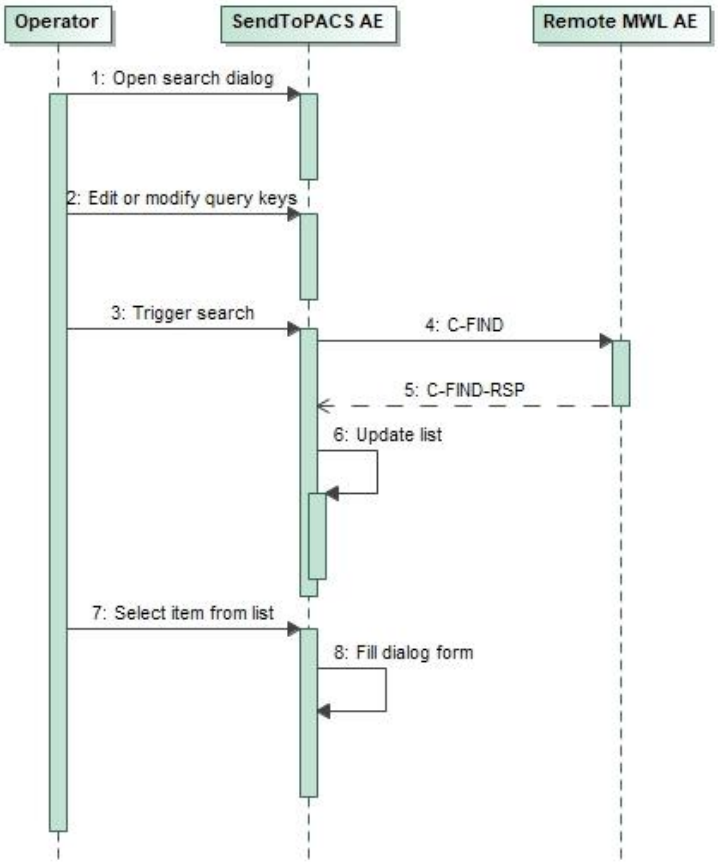

Figure 4. Searching in a Modality Worklist

4.2.3.3.2.2 Proposed Presentation Contexts

Table 15. Proposed Presentation Contexts for Modality Worklist Client AE

Abstract Syntax		Transfer Syntax		Role	Ext. Neg.
Name	**UID**	**Name List**	**UID List**		
	1.2.840.10008.5.1.4.31	Implicit VR Little Endian	1.2.840.10008.1.2	SCU	None

Modality Worklist Information Model – FIND		Explicit VR Little Endian	1.2.840.10008.1.2.1		
		Explicit VR Big Endian	1.2.840.10008.1.2.2		

4.2.3.3.2.3 SOP Specific Conformance for Modality Worklist SOP Class

Table 16. Modality Worklist Client C-STORE Response Status Handling Behavior

Service Status	Further Meaning	Error Code	Behavior
Success	Matching is complete	0000	This is the last response and the Client will release the Association after collecting results. Then the pick–list will be updated.
Pending	Matching is continuing	FF00	The Client waits for another response.

Table 17. Modality Worklist Client Communication Failure Behavior

Exception	Behavior
Association aborted by the SCP or the network layers indicate communication loss (i.e. low–level TCP/IP socket closure)	Error message might go to the application logs. The pick–list is updated with as many entries as possible.

The attributes listed below will be requested in a query. The corresponding matching keys are empty if the operator didn't specify a particular value.

Table 18. Modality Worklist C-FIND SCU Supported Elements

Tag	VR	Attribute Name	Query key	Displayed	Imported
(0008,0050)	SH	Accession Number	—	X	X
(0008,0090)	PN	Referring Physician Name	—	X	X
(0008,1080)	LO	Admitting Diagnoses Description	—	X	X
(0008,1110)	SQ	Referenced Study Sequence			
>(0008,1150)	UI	Referenced SOP Class UID	—	X	X
>(0008,1155)	UI	Referenced SOP Instance UID	—	X	X
(0008,1125)	SQ	Referenced Patient Sequence			
>(0008,1150)	UI	Referenced SOP Class UID	—	X	X
>(0008,1155)	UI	Referenced SOP Instance UID	—	X	X
(0010,0010)	PN	Patient's Name	P	X	X
(0010,0020)	LO	Patient ID	P	X	X
(0010,0021)	LO	Issuer of Patient ID	—	X	X
(0010,0030)	DA	Patient's Birth Date	—	X	X
(0010,0040)	CS	Patient's Sex	—	X	X
(0010,1030)	DS	Patient's Weight	—	X	X
(0010,2000)	LO	Medical Alerts	—	X	X
(0010,2110)	LO	Allergies	—	X	X
(0010,21b0)	LT	Additional Patient History	—	X	X
(0010,21c0)	US	Pregnancy Status	—	F	F
(0020,000D)	UI	Study Instance UID	—	X	X
(0032,1032)	PN	Requesting Physician	—	X	—
(0032,1033)	PN	Requesting Service	—	X	—
(0032,1060)	LO	Requested Procedure Description	—	X	X
(0032,1064)	SQ	Requested Procedure Code Sequence			
>(0008,0100)	SH	Code Value	—	X	X
>(0008,0102)	SH	Coding Scheme Designator	—	X	X

>(0008,0103)	SH	Coding Scheme Version	—	X	X
>(0008,0104)	LO	Code Meaning	—	X	X
(0038,0010)	LO	Admission ID	—	X	X
(0038,0050)	LO	Special Needs	—	X	—
(0038,0300)	LO	Current Patient Location	—	X	—
(0038,0500)	LO	Patient State	—	X	X
(0040,0100)	SQ	Scheduled Procedure Step Sequence			
>(0008,0060)	SH	Modality	C	X	X
>(0032,1070)	LO	Requested Contrast Agent	—	X	—
>(0040,0001)	AE	Scheduled Station AE Title	C	X	—
>(0040,0002)	DA	Scheduled Procedure Step Start Date	X	X	—
>(0040,0003)	TM	Scheduled Procedure Step Start Time	—	X	—
>(0040,0006)	PN	Scheduled Performing Physician's Name	—	X	—
>(0040,0007)	LO	Scheduled Procedure Step Description	—	X	X
>(0040,0008)	SQ	Scheduled Protocol Code Sequence			
>>(0008,0100)	SH	Code Value	—	X	X
>>(0008,0102)	SH	Coding Scheme Designator	—	X	X
>>(0008,0103)	SH	Coding Scheme Version	—	X	X
>>(0008,0104)	LO	Code Meaning	—	X	X
>(0040,0009)	SH	Scheduled Procedure Step ID	—	X	X
>(0040,0010)	SH	Scheduled Station Name	—	X	—
>(0040,0011)	SH	Scheduled Procedure Step Location	—	X	—
>(0040,0012)	LO	Pre–Medication	—	X	—
>(0040,0020)	CS	Scheduled Procedure Step Status	—	X	—
(0040,1001)	SH	Requested Procedure ID	X	X	X
(0040,1003)	SH	Requested Procedure Priority	—	X	—
(0040,1004)	LO	Patient Transport Arrangements	—	X	—
(0040,2016)	LO	Placer Order Number / Imaging Service Request	—	X	—
(0040,2017)	LO	Filler Order Number / Imaging Service Request	—	X	—
(0040,3001)	LO	Confidentiality Constraint on Patient Data Description	—	X	—

Values for the **Query Key** column:

X

An exact match.

F

An exact match. If value is incorrect or missing some symbols due program conversion from server – will try to fix.

P

A partial match. Automatically adds leading and trailing wildcards. If both last name and first name is specified, then the pattern becomes `*last*first*`.

C

An exact match. The value comes from configuration as default value, but can be changed by operator and become as an exact match (**X**).

Values for the **Imported** column:

X

Imported into the application and might be used in the resulting SOP instances. See also the table in 8.1.3 Attribute Mapping.

Can set Query/Retrieve Level for MWL storage AE: STUDY, SERIES, PATIENT, IMAGE. **Default value is empty and it should not require to set other level**. Operator can change this in search dialog "Model level".

4.2.4 Query/Retrieve Client Application Entity Specification

4.2.4.1 SOP Classes

Table 19. SOP Classes for Query/Retrieve Client AE

SOP Class Name	SOP Class UID	SCU	SCP
Patient Root Query/Retrieve Information Model - FIND	1.2.840.10008.5.1.4.1.2.1.1	Yes	No
Study Root Query/Retrieve Information Model - FIND	1.2.840.10008.5.1.4.1.2.2.1	Yes	No
Patient/Study Only Query/Retrieve Information Model - FIND	1.2.840.10008.5.1.4.1.2.3.1	Yes	No

4.2.4.2 Associations Policies

4.2.4.2.1 General

At a command from the operator, the Query/Retrieve Client AE attempts to establish an association with the specified Remote AE. When the association is established, a C–FIND request is made to retrieve an information using the defined matching keys. The Query/Retrieve Client waits for any C–FIND response. The established association remains active until a C–FIND response from the remote AE indicates the end of items, or until a timeout period expires.
The Query/Retrieve Client AE itself does not accept Associations.
The DICOM standard application context name for DICOM 3.0 is always accepted and proposed:

Table 20. DICOM application context name for Query/Retrieve Client AE

Application Context Name	1.2.840.10008.3.1.1.1

4.2.4.2.2 Number of Associations

Only a single Association is active at the moment. The results are displayed to the operator only after receiving them from SCP entirely.

4.2.4.2.3 Asynchronous Nature

The Modality Worklist Client does not support asynchronous communication (multiple outstanding transactions over a single Association).

4.2.4.2.4 Implementation Identifying Information

The implementation information for this Application Entity is:

Table 21. DICOM Implementation Class and Version for Query/Retrieve Client AE

Implementation Class UID	1.3.6.1.4.1.44316.3
Implementation Version Name	MDSENDTOPACS

4.2.4.3 Association Initiation Policy

4.2.4.3.1 Activity – Query query/retrieve information

4.2.4.3.1.1 Description and Sequencing of Activity

The Query/Retrieve SCU is governed by the WORKLIST configuration and search dialog that provides study and patient data for the next acquisition.
The dialog allows to enter patient ID and patient name (first name or last name, or middle name, or full name separated parts by "^").
Remote Q/R AE, that do not return results with specific character set attribute – can set character set from settings (to correct result).
Wildcards (checkbox near input) can be checked to patient ID and patient name search parameters in the same dialog. This automatically will add wildcard symbols "*" at the beginning and the end of search parameter. Some other Storage

servers prohibits wildcard or have other pattern – must uncheck wildcard checkbox and manually add "*" or other wildcard symbols, to the search parameter.
Maximum search result is 1000 items. Some record will be duplicates, but final result will be unique record (will collect and becomes smaller list).
After receiving search results, the application updates the list from which an existing patient can be chosen.
The operator can select an entry and press the button at the bottom at the list. This will update patient and study dialog form for further process.

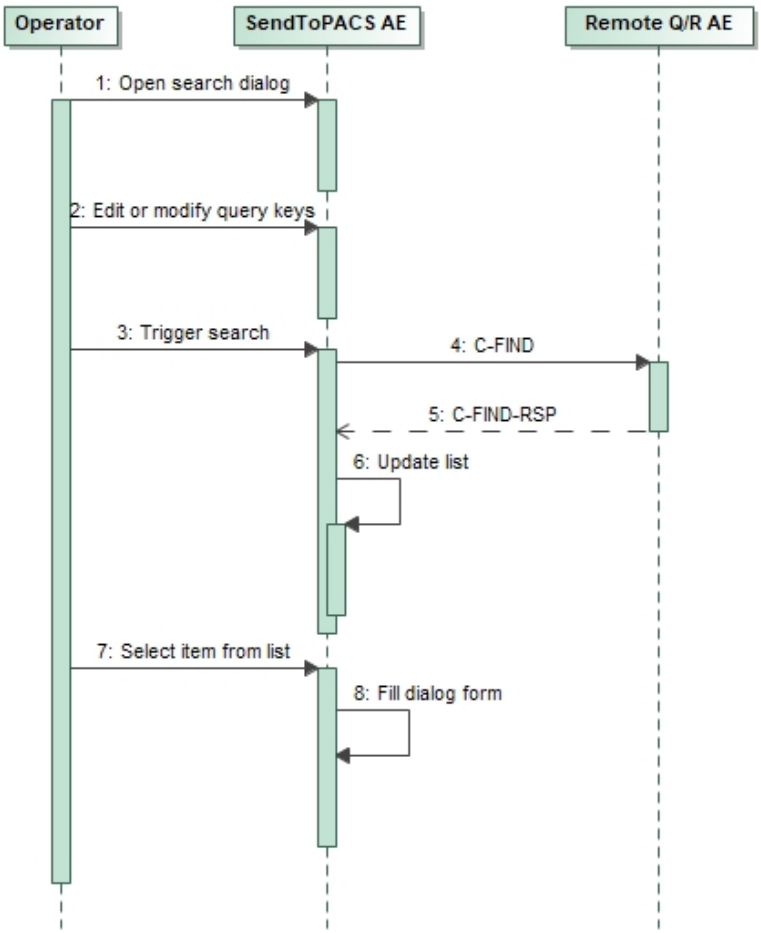

Figure 5. Searching in query/retrieve

4.2.4.3.2.2 Proposed Presentation Contexts

Table 22. Proposed Presentation Contexts for Query/Retrieve Client AE

Abstract Syntax		Transfer Syntax		Role	Ext. Neg.
Name	**UID**	**Name List**	**UID List**		
Patient Root Query/Retrieve Information Model - FIND	1.2.840.10008.5.1.4.1.2.1.1	Implicit VR Little Endian	1.2.840.10008.1.2	SCU	None
		Explicit VR Little Endian	1.2.840.10008.1.2.1		
		Explicit VR Big Endian	1.2.840.10008.1.2.2		
Study Root Query/Retrieve Information Model - FIND	1.2.840.10008.5.1.4.1.2.2.1	Implicit VR Little Endian	1.2.840.10008.1.2		
		Explicit VR Little Endian	1.2.840.10008.1.2.1		
		Explicit VR Big Endian	1.2.840.10008.1.2.2		
Patient/Study Only Query/Retrieve Information Model - FIND	1.2.840.10008.5.1.4.1.2.3.1	Implicit VR Little Endian	1.2.840.10008.1.2		
		Explicit VR Little Endian	1.2.840.10008.1.2.1		
		Explicit VR Big Endian	1.2.840.10008.1.2.2		

4.2.4.3.2.3 SOP Specific Conformance for Query/Retrieve SOP Class

Table 23. Query/Retrieve Client C-STORE Response Status Handling Behavior

Service Status	Further Meaning	Error Code	Behavior
Success	Matching is complete	0000	This is the last response and the Client will release the Association after collecting results. Then the pick–list will be updated.
Pending	Matching is continuing	FF00	The Client waits for another response.

Table 24. Query/Retrieve Client Communication Failure Behavior

Exception	Behavior
Association aborted by the SCP or the network layers indicate communication loss (i.e. low–level TCP/IP socket closure)	Error message might go to the application logs. The pick–list is updated with as many entries as possible.

Can set Query/Retrieve Level: STUDY, SERIES, PATIENT, IMAGE. Operator can change this in search dialog “Model level”.

Table 25. Query/Retrieve C-FIND SCU Supported levels

Exception	Default	Query custom Levels
Patient Root Query/Retrieve Information Model - FIND	PATIENT	STUDY, SERIES, PATIENT, IMAGE
Study Root Query/Retrieve Information Model - FIND	STUDY	
Patient/Study Only Query/Retrieve Information Model - FIND	STUDY	

The attributes listed below will be requested in a query. The corresponding matching keys are empty if the operator didn't specify a particular value.

Table 26. Query/Retrieve C-FIND SCU Supported Elements

Tag	VR	Attribute Name	Query key	Displayed	Imported
(0010,0010)	PN	Patient's Name	P	X	X
(0010,0020)	LO	Patient ID	P	X	X
(0010,0021)	LO	Issuer of Patient ID	—	X	—
(0010,0030)	DA	Patient's Birth Date	—	X	X
(0010,0040)	CS	Patient's Sex	—	X	X
(0010,1030)	DS	Patient's Weight	—	X	—

Values for the **Query Key** column:

X

An exact match.

P

A partial match. Automatically adds leading and trailing wildcards. If both last name and first name is specified, then the pattern becomes `*last*first*`.

Values for the **Imported** column:

X

Imported into the application and might be used in the resulting SOP instances. See also the table in 8.1.3 Attribute Mapping.

4.3 Network Interfaces

DICOM Upper Layer over TCP/IP is supported.

4.3.1 Physical Network Interface

SendToPACS is indifferent to the physical medium over which TCP/IP executes. It inherits the TCP/IP stack from the operating system or, in case of Storage Client, from Java Runtime Environment.

4.3.2 Additional Protocols

No additional protocols are supported.

4.3.3 IPv4 and IPv6 Support

Only IPv4 is explicitly supported and was tested.

4.4 Configuration

4.4.1 AE Title/Presentation Address Mapping

The remote AE Titles and TCP ports are configurable in application settings.

4.4.1.1 Local AE Titles

A single AE Title is shared among all local AEs and is configurable in application settings Clients will use it as the Calling AE Title.

Table 27. AE Title Configuration Table

Application Entity	Default AE Title	Default TCP/IP Port
Verification Client	SENDTOPACS	—
Storage Client		
Modality Worklist Client		
Query/Retrieve Client		

A client chooses any free TCP/IP port offered by the Windows Sockets layer. The IP address is managed by the operating system and can be configured there.

4.4.1.2 Remote AE Titles

AETs for Storage SCP, MWL SCP and Q/R SCP are configurable (MWL and Q/R is displayed in the same list). It's up to the operator to ensure that Remote AEs accept the configured local title (Calling AE Title).

4.4.2 Parameters

SendToPACS configuration parameters relevant to DICOM communication are as follows.

Table 28. Configuration Parameter Table

Parameter	Config–urable?	Default Value
General Parameters		
Proposed Called AETs	Yes	Assigned by user
Proposed Calling AET	Yes	SENDTOPACS
Time–out waiting for TCP/IP connect	No	10s
Maximum PDU size the AE can receive	No	16384
Maximum PDU size the AE can send	No	16384
Support for the Basic TLS Secure Transport Connection Profile	No	Off
Time-out waiting for a DIMSE–RSP	No	0s
Time-out waiting for a DIMSE-RQ	No	0s
Time-out waiting for receiving A-ASSOCIATE-AC	No	10s
Time-out waiting for receiving A-RELEASE-RP	No	50ms

Time delay for Socket close after sending A-ABORT	No	0s
Verification Client		
Client execution time (application limits client)	No	10s
Storage Client AE		
Pack Command and Data PDVs in one PDU	No	False
Client execution time to process one study (application limits client)	No	7200s
Modality Worklist Client		
Client execution time to receive data (application limits client)	No	10s

5 Media Interchange

SendToPACS does not support Media Interchange.

6 Support of Extended Character Sets

SendToPACS allows to set and change character set to converting SOP instance to DICOM format in general settings. Operator, during configuration, can set Storage SCP, MWL SCP and Q/R SCP (MWL and Q/R is displayed in the same list) character set. This will represent as default character set in case MWL or Q/R SCP do not provide with result.

For Storage SCP, character set will be set as default to fill patient and study information form. Operator can change character set for own purpose and send SOP Instance to Storage SCP with different character set.
Recommended to set correct and constant specific character set for Storage SCP.

Supported character set:

- <empty> - Default repertoire (no specific character set will be added),
- ISO_IR 100 - Latin alphabet No. 1,
- ISO_IR 101 - Latin alphabet No. 2,
- ISO_IR 109 - Latin alphabet No. 3,
- ISO_IR 110 - Latin alphabet No. 4,
- ISO_IR 148 - Latin alphabet No. 5,
- ISO_IR 144 - Cyrillic,
- ISO_IR 127 - Arabic,
- ISO_IR 126 - Greek,
- ISO_IR 138 - Hebrew,
- ISO_IR 13 - Japanese,
- ISO_IR 166 - Thai,
- ISO 2022 IR 6", Default repertoire,
- ISO 2022 IR 100 - Latin alphabet No. 1,
- ISO 2022 IR 101 - Latin alphabet No. 2,
- ISO 2022 IR 109 - Latin alphabet No. 3,
- ISO 2022 IR 110 - Latin alphabet No. 4,
- ISO 2022 IR 148 - Latin alphabet No. 5,
- ISO 2022 IR 144 - Cyrillic,
- ISO 2022 IR 127 - Arabic,
- ISO 2022 IR 126 - Greek,
- ISO 2022 IR 138 - Hebrew,
- ISO 2022 IR 13 - Japanese,
- ISO 2022 IR 166 - Thai,
- ISO 2022 IR 87 - Japanese,
- ISO 2022 IR 159 - Japanese,
- ISO 2022 IR 149 - Korean,
- ISO 2022 IR 58 - Simplified Chinese,
- GB18030 - GB18030,
- ISO_IR 192 - Unicode in UTF-8

7 Security

The DICOM capabilities of SendToPACS do not support any specific security measures.
It is assumed that the Software is used within a secured environment. It is assumed that a secured environment includes at a minimum:

- firewall or router protections to ensure that the Software only has network access to approved external hosts and services;
- appropriate secure network channels (e.g. such as a Virtual Private Network) for any communication with external hosts and services outside the locally secured environment.

Other network security procedures such as automated intrusion detection may be appropriate in some environments.
Additional security features may be established by the local security policy and are beyond the scope of this conformance statement.

8 Annexes

8.1 IOD Contents

Abbreviations used for presence of values (PoV):

VNAP

Value Not Always Present (attribute has zero length if no value is present) – Applicable for Type 2, 2C.

ANAP

Attribute is not always present – Applicable for Type 3

ALWAYS

Attribute is always present with a value – Applicable for Type 1

EMPTY

Attribute is sent without a value – Applicable for Type 2

Abbreviations used for sources of data:

USER

Attribute value is generated from user input.

AUTO

Attribute value is generated automatically.

MWL

Attribute value is the same as the value received using a DICOM service such as Modality Worklist, Modality Performed Procedure Step, etc.

Q/R

Attribute value is the same as the value received using a DICOM service such as Query/Retrieve.

CONFIG

Attribute value is a configurable parameter.

8.1.1 File Meta Information

Table 29. DICOM File Meta Information

Tag	Type	VR	Name	Description	PoV	Source
—	1	—	File Preamble	A fixed 128-byte field available for Application Profile or implementation specified use. If not used by an Application Profile or a specific implementation all bytes shall be set to 00H.	ALWAYS	AUTO
—	1	—	DICOM Prefix	Four bytes containing the character string "DICM". This Prefix is intended to be used to recognize that this File is or not a DICOM File.	ALWAYS	AUTO
(0002,0000)	1	UL	File Meta Information Group Length	Number of bytes following this File Meta Element (end of the Value field) up to and including the last File Meta Element of the Group 2 File Meta Information	ALWAYS	AUTO
(0002,0001)	1	OB	File Meta Information Version2021	This is a two bytes field where each bit identifies a version of this File Meta Information header. In version 1 the first byte value is 00H and the second value byte value is 01H. *Always "00\01"*	ALWAYS	AUTO
(0002,0002)	1	UI	Media Storage SOP Class UID	Uniquely identifies the SOP Class associated with the Data Set. *For image/videos "1.2.840.10008.5.1.4.1.1.7"* *For PDF "1.2.840.10008.5.1.4.1.1.104.1"* *Operator can define different SOP Class UID and will own risk, but final DICOM file content will be*	ALWAYS	AUTO, CONFIG

				Secondary Capture Image Storage or Encapsulated PDF Storage IOD.		
(0002,0003)	1	UI	Media Storage SOP Instance UID	Uniquely identifies the SOP Instance associated with the Data Set placed in the file and following the File Meta Information. *Duplicates (0008,0018) — see Table 37*	ALWAYS	AUTO
(0002,0010)	1	UI	Transfer Syntax UID	Uniquely identifies the Transfer Syntax used to encode the following Data Set. This Transfer Syntax does not apply to the File Meta Information. *Constant value that depends on instance type and configuration:* *for image — "1.2.840.10008.1.2.4.50"* *for videos — one of "1.2.840.10008.1.2.4.100", "1.2.840.10008.1.2.4.101", "1.2.840.10008.1.2.4.102", "1.2.840.10008.1.2.4.103" as per configuration* *for PDF – "1.2.840.10008.1.2.1"*	ALWAYS	AUTO, CONFIG
(0002,0012)	1	UI	Implementation Class UID	Uniquely identifies the implementation that wrote this file and its content. It provides an unambiguous identification of the type of implementation that last wrote the file in the event of interchange problems. It follows the same policies as defined by PS3.7 (association negotiation). *Always "1.3.6.1.4.1.44316.3"*	ALWAYS	AUTO
(0002,0013)	3	SH	Implementation Version Name	Identifies a version for an Implementation Class UID (0002,0012) using up to 16 characters of the repertoire identified in Section 8.5. It follows the same policies as defined by PS3.7 (association negotiation). *Always "MDSENDTOPACS"*	ALWAYS	AUTO

8.1.2 Created SOP Instances

8.1.2.1 Secondary Capture IOD modules

Table 30. Use of Modules

IE	Module	Usage
Patient		
	Patient	MANDATORY
	Clinical Trial Subject	OPTIONAL
Study		
	General Study	MANDATORY
	Patient Study	OPTIONAL
	Clinical Trial Study	OPTIONAL
Series		
	General Series	MANDATORY
	Clinical Trial Series	OPTIONAL
Equipment		

	General Equipment	OPTIONAL
	SC Equipment	MANDATORY
Image		
	General Image	MANDATORY
	General Reference	OPTIONAL
	Image Pixel	MANDATORY
	Device	OPTIONAL
	Specimen	OPTIONAL
	SC Image	MANDATORY
	Overlay Plane	OPTIONAL
	Modality LUT	OPTIONAL
	VOI LUT	OPTIONAL
	ICC Profile	OPTIONAL
	SOP Common	MANDATORY
	Common Instance Reference	OPTIONAL

8.1.2.2 Encapsulated PDF IOD modules

Table 31. Use of Modules

IE	Module	Usage
Patient		
	Patient	MANDATORY
	Clinical Trial Subject	OPTIONAL
Study		
	General Study	MANDATORY
	Patient Study	OPTIONAL
	Clinical Trial Study	OPTIONAL
Series		
	Encapsulated Document Series	MANDATORY
	Clinical Trial Series	OPTIONAL
Equipment		
	General Equipment	OPTIONAL
	SC Equipment	MANDATORY
Encapsulated Document		
	Encapsulated Document	MANDATORY
	SOP Common	MANDATORY

8.1.2.3 IOD modules

Table 32. Module "Patient"

Tag	Type	VR	Name	Description	PoV	Source
(0010,0010)	2	PN	Patient's Name	Patient's full name.	ALWAYS	MWL, Q/R, USER

(0010,0020)	2	LO	Patient ID	Primary hospital identification number or code for the patient.	ALWAYS	MWL, Q/R, USER
(0010,0030)	2	DA	Patient's Birth Date	Birth date of the patient.	VNAP	MWL, Q/R, USER
(0010,0040)	2	CS	Patient's Sex	Sex of the named patient. Enumerated Values: M = male F = female	VNAP	MWL, Q/R, USER
0010,0021)	3	LO	Issuer of Patient ID	Identifier of the Assigning Authority (system, organization, agency, or department) that issued the Patient ID.	ANAP	MWL
(0008,1120)	3	SQ	Referenced Patient Sequence	A sequence that provides reference to a Patient SOP Class/Instance pair. Only a single Item is permitted in this Sequence.	ANAP	MWL
>(0008,1150)	1	UI	Referenced SOP Class UID	Uniquely identifies the referenced SOP Class.	ALWAYS	MWL
>(0008,1155)	1	UI	Referenced SOP Instance UID	Uniquely identifies the referenced SOP Instance.	ALWAYS	MWL

Table 33. Secondary Capture IOD - Module "General Study"

Tag	Type	VR	Name	Description	PoV	Source
(0020,000D)	1	UI	Study Instance UID	Unique identifier for the Study. *Unscheduled case: "1.3.6.1.4.1.44316.3." extended by software version number, date and time information, "1" as study level attribute, time in milliseconds and additional randomness.* *Scheduled case: copied from MWL (0020,000d).*	ALWAYS	MWL, USER, AUTO
(0008,0020)	2	DA	Study Date	Date the Study started. Date, when procedure step was started. *Scheduled case: copied from MWL (0040,0100)> (0040,0002) in GUI, but operator can change.*	ALWAYS	MWL, USER
(0008,0030)	2	TM	Study Time	Time the Study started. Time, when procedure step was started. *Scheduled case: copied from MWL (0040,0100)> (0040,0003) in GUI, but operator can change.*	ALWAYS	MWL, USER
(0008,0090)	2	PN	Referring Physician's Name	Name of the patient's referring physician. *Always empty.* *Scheduled case: copied from MWL (0008,0090).*	VNAP	MWL
(0020,0010)	2	SH	Study ID	User or equipment generated Study identifier. *Scheduled case: copied from MWL (0040,1001)*	VNAP	MWL, USER
(0008,1030)	3	LO	Study Description	Description or classification of the Study (component) performed. *Scheduled case: copied from MWL (0032,1060)*	ANAP	MWL, USER
(0008,0050)	2	SH	Accession Number	A RIS–generated number that identifies the order for the Study. *Scheduled case: copied from MWL (0008,0050)*	ANAP	MWL, USER
(0008,1032)	3	SQ	Procedure Code Sequence	A Sequence that conveys the type of procedure performed. One or more Items are permitted in this Sequence. *Scheduled case: copied from MWL (0032,1064)*	ANAP	MWL

>(0008,0100)	1C	SH	Code Value	The identifier of the Coded Entry.	ANAP	MWL
>(0008,0102)	1C	SH	Coding Scheme Designator	The identifier of the coding scheme in which the Coded Entry is defined.	ANAP	MWL
>(0008,0103)	1C	SH	Coding Scheme Version	An identifier of the version of the coding scheme if necessary, to resolve ambiguity.	ANAP	MWL
>(0008,0104)	1	LO	Code Meaning	Text that conveys the meaning of the Coded Entry.	ALWAYS	MWL
(0008,1110)	3	SQ	Referenced Study Sequence	A Sequence that provides reference to a Study SOP Class/Instance pair. One or more Items are permitted in this Sequence.	ANAP	MWL
>(0008,1150)	1	UI	Referenced SOP Class UID	Uniquely identifies the referenced SOP Class.	ALWAYS	MWL
>(0008,1155)	1	UI	Referenced SOP Instance UID	Uniquely identifies the referenced SOP Instance.	ALWAYS	MWL

Table 34. Module "Patient Study"

Tag	Type	VR	Name	Description	PoV	Source
(0008,1080)	3	LO	Admitting Diagnoses Description	Description of the admitting diagnosis (diagnoses)	ANAP	MWL
(0010,1030)	3	DS	Patient's Weight	Weight of the Patient, in kilograms.	ANAP	MWL
(0010,2000)	3	LO	Medical Alerts	Conditions to which medical staff should be alerted (e.g., contagious condition, drug allergies, etc.)	ANAP	MWL
(0010,2110)	3	LO	Allergies	Description of prior reaction to contrast agents, or other patient allergies or adverse reactions.	ANAP	MWL
(0010,21C0)	3	US	Pregnancy Status	Describes pregnancy state of Patient. Enumerated Values: 0001 not pregnant 0002 possibly pregnant 0003 definitely pregnant 0004 unknown *If value from MWL is one of the numbers: 1, 2, 3, 4 – will add 000 to the beginning to form correct value.*	ANAP	MWL
(0038,0500)	3	LO	Patient State	Description of Patient state (comatose, disoriented, vision impaired, etc.)	ANAP	MWL
(0010,21B0)	3	LT	Additional Patient History	Additional information about the Patient's medical history.	ANAP	MWL
(0038,0010)	3	LO	Admission ID	Identifier of the Visit as assigned by the healthcare provider	ANAP	MWL

Table 35. Module "General Series"

Tag	Type	VR	Name	Description	PoV	Source
(0008,0060)	1	CS	Modality	Source equipment that produced the Secondary Capture Series. *"OT" by default from settings* *Scheduled case: copied from MWL* (0040,0100)>(0008,0060	ALWAYS	MWL, CONFIG
(0020,000E)	1	UI	Series Instance UID	Unique identifier of the Series.	ALWAYS	AUTO

				"1.3.6.1.4.1.44316.3." extended by software version number, date and time information, "2" as series level attribute, series number and additional randomness.		
(0020,0011)	2	IS	Series Number	A number that identifies this Series.	ALWAYS	USER
(0020,0060)	2C	CS	Laterality	Laterality of (paired) body part examined. Required if the body part examined is a paired structure and Image Laterality (0020,0062) or Frame Laterality (0020,9072) or Measurement Laterality (0024,0113) are not sent. Enumerated Values: R right L left *Always empty. It is generally unknown which body part* is visible in the non-DICOM file*. The user interface also doesn't provide means to specify that.*	EMPTY	AUTO
(0008,0021)	3	DA	Series Date	Date the Series started.	ALWAYS	AUTO
(0008,0031)	3	TM	Series Time	Time the Series started.	ALWAYS	AUTO
(0008,103E)	3	LO	Series Description	Description of the Series.	ALWAYS	AUTO
(0040,0275)	3	SQ	Request Attributes Sequence	Sequence that contains Attributes from the Imaging Service Request. One or more Items are permitted in this Sequence.	ANAP	MWL
>(0040,1001)	1C	SH	Requested Procedure ID	Identifier that identifies the Requested Procedure in the Imaging Service Request. Required if procedure was scheduled. May be present otherwise. *Scheduled case: copied from MWL (0040,1001)*	ANAP	MWL
>(0032,1060)	3	LO	Requested Procedure Description	Institution-generated administrative description or classification of Requested Procedure. *Scheduled case: copied from MWL* (0032,1060)	ANAP	MWL
>(0040,0009)	1C	SH	Scheduled Procedure Step ID	Identifier that identifies the Scheduled Procedure Step. Required if procedure was scheduled. *Scheduled case: copied from MWL (0032,1064)>(0040,0009) or (0040,1001)*	ANAP	MWL
>(0040,0007)	3	LO	Scheduled Procedure Step Description	Institution-generated description or classification of the Scheduled Procedure Step to be performed. *Scheduled case: copied from MWL (0032,1064)>(0040,0007)*	ANAP	MWL
>(0040,0008)	3	SQ	Scheduled Protocol Code Sequence	Sequence describing the Scheduled Protocol following a specific coding scheme. One or more Items are permitted in this Sequence. *Scheduled case: copied from MWL (0040,0100)>(0040,0008)*	ANAP	MWL
>>(0008,0100)	1C	SH	Code Value	The identifier of the Coded Entry. *Scheduled case: copied from MWL (0040,0100)>(0040,0008)>(0008,0100)*	ANAP	MWL

>>(0008,0102)	1C	SH	Coding Scheme Designator	The identifier of the coding scheme in which the Coded Entry is defined. *Scheduled case: copied from MWL* (0040,0100)>(0040,0008)>(0008,0102)	ANAP	MWL
>>(0008,0103)	1C	SH	Coding Scheme Version	An identifier of the version of the coding scheme if necessary, to resolve ambiguity. *Scheduled case: copied from MWL (0040,0100)>(0040,0008)>(0008,0103)*	ANAP	MWL
>>(0008,0104)	1	LO	Code Meaning	Text that conveys the meaning of the Coded Entry. *Scheduled case: copied from MWL (0040,0100)>(0040,0008)>(0008,0104)*	ALWAYS	MWL
(0018,1030)	3	LO	Protocol Name	User-defined description of the conditions under which the Series was performed. *Scheduled case: copied from MWL (0032,1060)*	ANAP	MWL

Table 36. Module "Encapsulated Document Series"

Tag	Type	VR	Name	Description	PoV	Source
(0008,0060)	1	CS	Modality	Source equipment that produced the Secondary Capture Series. *"OT" by default from settings* *Scheduled case: copied from MWL* (0040,0100)>(0008,0060	ALWAYS	MWL, CONFIG
(0020,000E)	1	UI	Series Instance UID	Unique identifier of the Series. *"1.3.6.1.4.1.44316.3." extended by software version number, date and time information, "2" as series level attribute, series number and additional randomness.*	ALWAYS	AUTO
(0020,0011)	2	IS	Series Number	A number that identifies this Series.	ALWAYS	USER
(0008,0021)	3	DA	Series Date	Date the Series started.	ALWAYS	AUTO
(0008,0031)	3	TM	Series Time	Time the Series started.	ALWAYS	AUTO
(0008,103E)	3	LO	Series Description	Description of the Series.	ALWAYS	AUTO
(0040,0275)	3	SQ	Request Attributes Sequence	Sequence that contains Attributes from the Imaging Service Request. One or more Items are permitted in this Sequence.	ANAP	MWL
>(0040,1001)	1C	SH	Requested Procedure ID	Identifier that identifies the Requested Procedure in the Imaging Service Request. Required if procedure was scheduled. May be present otherwise. *Scheduled case: copied from MWL (0040,1001)*	ANAP	MWL
>(0032,1060)	3	LO	Requested Procedure Description	Institution-generated administrative description or classification of Requested Procedure. *Scheduled case: copied from MWL* (0032,1060)	ANAP	MWL
>(0040,0009)	1C	SH	Scheduled Procedure Step ID	Identifier that identifies the Scheduled Procedure Step. Required if procedure was scheduled.	ANAP	MWL

				Scheduled case: copied from MWL (0032,1064)>(0040,0009)		
>(0040,0007)	3	LO	Scheduled Procedure Step Description	Institution-generated description or classification of the Scheduled Procedure Step to be performed. *Scheduled case: copied from MWL (0032,1064)>(0040,0007)*	ANAP	MWL
>(0040,0008)	3	SQ	Scheduled Protocol Code Sequence	Sequence describing the Scheduled Protocol following a specific coding scheme. One or more Items are permitted in this Sequence. *Scheduled case: copied from MWL (0040,0100)>(0040,0008)*	ANAP	MWL
>>(0008,0100)	1C	SH	Code Value	The identifier of the Coded Entry. *Scheduled case: copied from MWL (0040,0100)>(0040,0008)>(0008,0100)*	ANAP	MWL
>>(0008,0102)	1C	SH	Coding Scheme Designator	The identifier of the coding scheme in which the Coded Entry is defined. *Scheduled case: copied from MWL* (0040,0100)>(0040,0008)>(0008,0102)	ANAP	MWL
>>(0008,0103)	1C	SH	Coding Scheme Version	An identifier of the version of the coding scheme if necessary, to resolve ambiguity. *Scheduled case: copied from MWL (0040,0100)>(0040,0008)>(0008,0103)*	ANAP	MWL
>>(0008,0104)	1	LO	Code Meaning	Text that conveys the meaning of the Coded Entry. *Scheduled case: copied from MWL (0040,0100)>(0040,0008)>(0008,0104)*	ALWAYS	MWL
(0018,1030)	3	LO	Protocol Name	User-defined description of the conditions under which the Series was performed. *Scheduled case: copied from MWL (0032,1060)*	ANAP	MWL

Table 37. Module "General Equipment"

Tag	Type	VR	Name	Description	PoV	Source
(0008,0070)	2	LO	Manufacturer	Manufacturer of the equipment that produced the composite instances	EMPTY	AUTO
(0008,1010)	3	SH	Station Name	User defined name identifying the machine that produced the Composite Instances. *From configuration: settings Station Name*	ALWAYS	CONFIG
(0018,1020)	3	LO	Software Versions	Manufacturer's designation of software version of the equipment that produced the Composite Instances. *Software version number: X.X.X*	ALWAYS	AUTO
(0008,0080)	3	LO	Institution Name	Institution where the equipment that produced the Composite Instances is located. *From configuration: settings Institution Name*	ANAP	CONFIG

Table 38. Secondary Capture IOD - Module "SC Equipment"

Tag	Type	VR	Name	Description	PoV	Source
(0008,0064)	1	CS	Conversion Type	Describes the kind of image conversion. Defined Terms:	ALWAYS	AUTO

				DV Digitized Video DI Digital Interface DF Digitized Film WSD Workstation SD Scanned Document SI Scanned Image DRW Drawing SYN Synthetic Image *Always "SI" for image and "DV" for video.*		
(0018,1016)	3	LO	Secondary Capture Device Manufacturer	Manufacturer of the Secondary Capture Device *Always "MedDream".*	ALWAYS	AUTO
(0018,1018)	3	LO	Secondary Capture Device Manufacturer's Model Name	Manufacturer's model number of the Secondary Capture Device *Always "MedDream SendToPACS".*	ALWAYS	AUTO

Table 39. Module "General Image"

Tag	Type	VR	Name	Description	PoV	Source
(0008,0008)	3	CS	Image Type	Image identification characteristics. See C.8.17.2.1.4 for specialization. Multi-value attribute containing 4 values: 1) Pixel Data Characteristics "ORIGINAL" for original acquired images. *Always "ORIGINAL" for video.* 2) Patient Examination Characteristics *Always "PRIMARY" for video.* 3) Modality Specific Characteristics *Always empty.* 4) Implementation specific identifiers *Always empty.* *For images this entire attribute is not present.*	ANAP	AUTO
(0008,0023)	2C	DA	Content Date	The date the image pixel data creation started. Required if image is part of a Series in which the images are temporally related. May be present otherwise. *Will set file last modification date, but if it fails to take - will set study Date.*	ALWAYS	AUTO
(0008,0033)	2C	TM	Content Time	The time the image pixel data creation started. Required if image is part of a Series in which the images are temporally related. May be present otherwise. *Will set file last modification time, but if it fails to take - will set study Time.*	ALWAYS	AUTO
(0020,0013)	2	IS	Instance Number	A number that identifies this image.	ALWAYS	AUTO
(0020,0020)	2C		Patient Orientation	Patient direction of the rows and columns of the image. Required if image does not require Image Orientation (Patient) (0020,0037) and Image Position (Patient) (0020,0032). May be present otherwise. See Section C.7.6.1.1.1 for further explanation. NOTE: IODs may have attributes other than Patient Orientation, Image Orientation, or Image Position	EMPTY	AUTO

				(Patient) to describe orientation in which case this attribute will be zero length. *Always empty because in many scenarios (for example, endoscopy) the orientation is variable*		
(0028,2110)	1	CS	Lossy Image Compression	Specifies whether an Image has undergone lossy compression. Enumerated Values: 00 = Image has NOT been subjected to lossy compression. 01 = Image has been subjected to lossy compression. See C.7.6.1.1.5 “01” if image is compressed “00” otherwise *Always “01”*	ALWAYS	AUTO

Table 40. Module "Image Pixel"

Tag	Type	VR	Name	Description	PoV	Source
(0028,0002)	1	US	Samples Per Pixel	Number of samples (planes) in this image. See Section C.7.6.3.1.1 for further explanation. *Always "3"*	ALWAYS	AUTO
(0028,0004)	1	CS	Photometric Interpretation	Specifies the intended interpretation of the pixel data. See Section C.7.6.3.1.2 for further explanation. *Always "YBR_PARTIAL_420" for videos, "YBR_FULL_422" for image*	ALWAYS	AUTO
(0028,0006)	1C	US	Planar Configuration	Indicates whether the pixel data are sent color-by-plane or color-by-pixel. Required if Samples per Pixel (0028,0002) has a value greater than 1. Enumerated value shall be 0 (color-by-pixel). *Always “0”*	ALWAYS	AUTO
(0028,0010)	1	US	Rows	Number of rows in the image.	ALWAYS	AUTO
(0028,0011)	1	US	Columns	Number of columns in the image	ALWAYS	AUTO
(0028,0100)	1	US	Bits Allocated	Number of bits allocated for each pixel sample. Each sample shall have the same number of bits allocated. See PS 3.5 for further explanation. *Always “8”*	ALWAYS	AUTO
(0028,0101)	1	US	Bits Stored	Number of bits stored for each pixel sample. Each sample shall have the same number of bits stored. See PS 3.5 for further explanation. *Always “8”*	ALWAYS	AUTO
(0028,0102)	1	US	High Bit	Most significant bit for pixel sample data. Each sample shall have the same high bit. See PS 3.5 for further explanation. *Always “7”*	ALWAYS	AUTO
(0028,0103)	1	US	Pixel Representation	Data representation of the pixel samples. Each sample shall have the same pixel representation. Enumerated Values: 0000 = unsigned integer 0001 = 2's complement *Always “0”*	ALWAYS	AUTO
(7FE0,0010)	1C	OB	Pixel Data	A data stream of the pixel samples that comprise the Image. See C.7.6.3.1.4 for further explanation. Required if Pixel Data Provider URL (0028,7FE0) is not present.	ALWAYS	AUTO

Table 41. Module "Encapsulated Document"

Tag	Type	VR	Name	Description	PoV	Source
(0008,0023)	2C	DA	Content Date	The date the image pixel data creation started. Required if image is part of a Series in which the images are temporally related. May be present otherwise. *Will set file last modification date, but if it fails to take - will set study Date.*	ALWAYS	AUTO
(0008,0033)	2C	TM	Content Time	The time the image pixel data creation started. Required if image is part of a Series in which the images are temporally related. May be present otherwise. *Will set file last modification time, but if it fails to take - will set study Time.*	ALWAYS	AUTO
(0008,002A)	2	DT	Acquisition DateTime	The date and time that the original generation of the data in the document started. *Always empty.*	EMPTY	AUTO
(0020,0013)	2	IS	Instance Number	A number that identifies this image.	ALWAYS	AUTO
(0028,0301)	1	CS	Burned in Annotation	Indicates whether or not the encapsulated document contains sufficient burned in annotation to identify the patient and date the data was acquired. Enumerated Values: YES, NO Identification of patient and date as text in an encapsulated document (e.g., in an XML attribute or element) is equivalent to "burned in annotation". A de-identified document may use the value NO. If Modality (0008,0060) is M3D, the presence of identifying information embossed or engraved on any part of the model shall be indicated by a value of YES. *Always “NO”*	ALWAYS	AUTO
(0040,A043)	2	SQ	Document Class Code Sequence	A coded representation of the document title. Zero or one Item shall be included in this Sequence. *Always empty.*	EMPTY	AUTO
(0042,0010)	2	ST	Document Title	The title of the document. Note: In the case of a PDF encapsulated document, this may be the value of the "Title" entry in the "Document Information Directory" as encoded in the PDF data. *Always file name*	ALWAYS	AUTO
(0042,0011)	1	OB	Encapsulated Document	Encapsulated Document stream, containing a document encoded according to the MIME Type. *Always file content in bytes*	ALWAYS	AUTO
(0042,0012)	1	LO	MIME Type of Encapsulated Document	The type of the encapsulated document stream described using the MIME Media Type (see RFC 2046). *Always ”application/pdf”*	ALWAYS	AUTO

Table 42. Module "SOP Common"

Tag	Type	VR	Name	Description	PoV	Source
(0008,0016)	1	UI	SOP Class UID	Uniquely identifies the SOP Class. See C.12.1.1.1 for further explanation. See also PS 3.4.	ALWAYS	AUTO

				Always "1.2.840.10008.5.1.4.1.1.7".		
(0008,0018)	1	UI	SOP Instance UID	Uniquely identifies the SOP Instance. See C.12.1.1.1for further explanation. See also PS 3.4. *"1.3.6.1.4.1.44316.3." extended by software version number, date and time information, "3" as instance level attribute, instance number and additional randomness.*	ALWAYS	AUTO
(0008,0005)	1C	CS	Specific Character Set	Character Set that expands or replaces the Basic Graphic Set. Required if an expanded or replacement character set is used. See C.12.1.1.2 for Defined Terms. *Software settings defined to Storage SCP or selected by user. See 6 Support of Extended Character Sets.*	ALWAYS	AUTO, USER, CONFIG
(0008,0012)	3	DA	Instance Creation Date	Date the SOP Instance was created. This is the date that the SOP Instance UID was assigned, and does not change during subsequent coercion of the instance.	ALWAYS	AUTO
(0008,0013)	3	TM	Instance Creation Time	Time the SOP Instance was created. This is the date that the SOP Instance UID was assigned, and does not change during subsequent coercion of the instance.	ALWAYS	AUTO

8.1.3 Usage of Attributes from Received IODs

The usage of attributes of Modality Worklist IODs is described in chapter 4.2.3.3.1 Activity – Query Modality Worklist. The usage of attributes of Query/Retrieve IODs is described in chapter 4.2.4.3.1 Activity – Query query/retrieve information.

8.1.4 Attribute Mapping

The following attributes will be mapped from Modality Worklist to created SOP Instances:

Table 43. Attribute Mapping from MWL

Attribute	Instance IOD		MWL	
Exist	(0008,0020)	Study Date	(0040,0100)>(0040,0002)	Scheduled Procedure Step Sequence>Scheduled Procedure Step Start Date
Exist	(0008,0030)	Study Time	(0040,0100)>(0040,0003)	Scheduled Procedure Step Sequence>Scheduled Procedure Step Start Time
Exist	(0008,0050)	Accession Number	(0008,0050)	Accession Number
Exist	(0008,0090)	Referring Physician Name	(0008,0090)	Referring Physician Name
New	(0008,1080)	Admitting Diagnoses Description	(0008,1080)	Admitting Diagnoses Description
New	(0008,1110)	Referenced Study Sequence	(0008,1110)	Referenced Study Sequence
New	>(0008,1150)	Referenced SOP Class UID	>(0008,1150)	Referenced SOP Class UID
New	>(0008,1155)	Referenced SOP Instance UID	>(0008,1155)	Referenced SOP Instance UID
New	(0008,1120)	Referenced Patient Sequence	(0008,1120)	Referenced Patient Sequence
New	>(0008,1150)	Referenced SOP Class UID	>(0008,1150)	Referenced SOP Class UID
New	>(0008,1155)	Referenced SOP Instance UID	>(0008,1155)	Referenced SOP Instance UID
Exist	(0010,0010)	Patient's Name	(0010,0010)	Patient's Name
Exist	(0010,0020)	Patient ID	(0010,0020)	Patient ID
New	(0010,0021)	Issuer of Patient ID	(0010,0021)	Issuer of Patient ID
Exist	(0010,0030)	Patient's Birth Date	(0010,0030)	Patient's Birth Date
Exist	(0010,0040)	Patient's Sex	(0010,0040)	Patient's Sex

New	(0010,1030)	Patient's Weight	(0010,1030)	Patient's Weight
New	(0010,2000)	Medical Alerts	(0010,2000)	Medical Alerts
New	(0010,2110)	Allergies	(0010,2110)	Allergies
New	(0010,21b0)	Additional Patient History	(0010,21b0)	Additional Patient History
New	(0010,21c0)	Pregnancy Status	(0010,21c0)	Pregnancy Status
Exist	(0020,000D)	Study Instance UID	(0020,000D)	Study Instance UID
Exist	(0008,1030)	Study Description	(0032,1060)	Requested Procedure Description
New	(0018,1030)	Protocol Name	(0032,1060)	Requested Procedure Description
New	(0040,0275)	Request Attributes Sequence		
New	>(0040,1001)	Requested Procedure ID	(0040,1001)	Requested Procedure ID
New	>(0032,1060)	Requested Procedure Description	(0032,1060)	Requested Procedure Description
New	>(0040,0009)	Scheduled Procedure Step ID	(0040,0100)>(0040,0009)	Scheduled Procedure Step Sequence>Scheduled Procedure Step ID or Requested Procedure ID
New	>(0040,0007)	Scheduled Procedure Step Description	(0040,0100)>(0040,0007)	Scheduled Procedure Step Sequence>Scheduled Procedure Step Description
New	>(0040,0008)	Scheduled Protocol Code Sequence	(0040,0100)>(0040,0008)	Scheduled Procedure Step Sequence>Scheduled Protocol Code Sequence
New	>>(0008,0100)	Code Value	>>(0008,0100)	Code Value
New	>>(0008,0102)	Coding Scheme Designator	>>(0008,0102)	Coding Scheme Designator
New	>>(0008,0103)	Coding Scheme Version	>>(0008,0103)	Coding Scheme Version
New	>>(0008,0104)	Code Meaning	>>(0008,0104)	Code Meaning
New	(0008,1032)	Procedure Code Sequence	(0032,1064)	Requested Procedure Code Sequence
New	>(0008,0100)	Code Value	>(0008,0100)	Code Value
New	>(0008,0102)	Coding Scheme Designator	>(0008,0102)	Coding Scheme Designator
New	>(0008,0103)	Coding Scheme Version	>(0008,0103)	Coding Scheme Version
New	>(0008,0104)	Code Meaning	>(0008,0104)	Code Meaning
New	(0038,0010)	Admission ID	(0038,0010)	Admission ID
New	(0038,0500)	Patient State	(0038,0500)	Patient State
Exist	(0008,0060)	Modality	(0040,0100)>(0008,0060)	Scheduled Procedure Step Sequence>Modality
Exist	(0020,0010)	Study ID	(0040,1001)	Requested Procedure ID

New – indicates, that field will be added as new from MWL.
Exist – attribute will be added even MWL do not exist. If MWL has attributes and was not changed by operator – will be added.

The following attributes will be mapped from Query/Retrieve information to created SOP Instances:

Table 44. Attribute Mapping from Q/R

Attribute	Instance IOD		MWL	
Exist	(0010,0010)	Patient's Name	(0010,0010)	Patient's Name
Exist	(0010,0020)	Patient ID	(0010,0020)	Patient ID
Exist	(0010,0030)	Patient's Birth Date	(0010,0030)	Patient's Birth Date
Exist	(0010,0040)	Patient's Sex	(0010,0040)	Patient's Sex

Exist – attribute will be added even Q/R do not exist.

8.1.5 Coerced/Modified Fields

Attributes from MWL, can be modified manually after importing from MWL.
To create valid IOD – will exclude not valid MWL attributes and sequences. Operator can change MWL attributes and adjust values to meet validation. Other attributes will be set as empty values and will not be included (sequences or values, that is not required).

Table 45. MWL attributes allowed to change by operator

Instance IOD	
(0008,0020)	Study Date
(0008,0030)	Study Time
(0008,0050)	Accession Number
(0008,0060)	Modality
(0008,1030)	Study Description
(0010,0010)	Patient's Name
(0010,0020)	Patient ID
(0010,0030)	Patient's Birth Date
(0010,0040)	Patient's Sex
(0020,0010)	Study ID
(0020,000D)	Study Instance UID

8.1.6 Additional fields

Can set additional attribute via general settings "Additional Info tag". Can define private attribute (will set VR=LT) and other known DICOM standard attribute.
User can add this value to non-DICOM files in the main file list "Additional info" column.
If value is valid – will add attribute with user value during conversion to DICOM file.

8.2 Attributes subject to update

SendToPACS allows to modify DICOM instance attributes before send to Storage SCP.

8.2.1 Attributes change by operator

Operator can modify attributes:

Table 46. Attributes allowed to change by operator

Instance IOD	
(0008,0005)	Specific Character Set
(0008,0020)	Study Date
(0008,0030)	Study Time
(0008,0050)	Accession Number
(0008,1030)	Study Description
(0010,0010)	Patient's Name
(0010,0020)	Patient ID
(0010,0030)	Patient's Birth Date
(0010,0040)	Patient's Sex

(0020,0010)	Study ID
(0020,000D)	Study Instance UID

8.2.2 Attributes change with Modality worklist

Operator can modify DICOM instance attributes with MWL.
By selecting MWL – will fill GUI and allow to change attributes defined in 8.2.1.
Before sending DICOM instance to to Storage SCP – will update attributes by mapping:

Table 47. Add/update attributes from MWL mapping

Attribute	Instance IOD		MWL	
A, U, AMWL, UMWL	(0008,0020)	Study Date	(0040,0100)>(0040,0002)	Scheduled Procedure Step Sequence>Scheduled Procedure Step Start Date
A, U, AMWL, UMWL	(0008,0030)	Study Time	(0040,0100)>(0040,0003)	Scheduled Procedure Step Sequence>Scheduled Procedure Step Start Time
A, U, AMWL, UMWL	(0008,0050)	Accession Number	(0008,0050)	Accession Number
AMWL, UMWL	(0008,0090)	Referring Physician Name	(0008,0090)	Referring Physician Name
AMWL, UMWL	(0008,1080)	Admitting Diagnoses Description	(0008,1080)	Admitting Diagnoses Description
RS	(0008,1110)	Referenced Study Sequence	(0008,1110)	Referenced Study Sequence
AMWL	>(0008,1150)	Referenced SOP Class UID	>(0008,1150)	Referenced SOP Class UID
AMWL	>(0008,1155)	Referenced SOP Instance UID	>(0008,1155)	Referenced SOP Instance UID
RS	(0008,1120)	Referenced Patient Sequence	(0008,1120)	Referenced Patient Sequence
AMWL	>(0008,1150)	Referenced SOP Class UID	>(0008,1150)	Referenced SOP Class UID
AMWL	>(0008,1155)	Referenced SOP Instance UID	>(0008,1155)	Referenced SOP Instance UID
A, U, AMWL, UMWL	(0010,0010)	Patient's Name	(0010,0010)	Patient's Name
A, U, AMWL, UMWL	(0010,0020)	Patient ID	(0010,0020)	Patient ID
AMWL, UMWL	(0010,0021)	Issuer of Patient ID	(0010,0021)	Issuer of Patient ID
A, U, AMWL, UMWL	(0010,0030)	Patient's Birth Date	(0010,0030)	Patient's Birth Date
A, U, AMWL, UMWL	(0010,0040)	Patient's Sex	(0010,0040)	Patient's Sex
AMWL, UMWL	(0010,1030)	Patient's Weight	(0010,1030)	Patient's Weight
AMWL, UMWL	(0010,2000)	Medical Alerts	(0010,2000)	Medical Alerts
AMWL, UMWL	(0010,2110)	Allergies	(0010,2110)	Allergies
AMWL, UMWL	(0010,21b0)	Additional Patient History	(0010,21b0)	Additional Patient History
AMWL, UMWL	(0010,21c0)	Pregnancy Status	(0010,21c0)	Pregnancy Status
A, U, AMWL, UMWL	(0020,000D)	Study Instance UID	(0020,000D)	Study Instance UID

A, U, AMWL, UMWL	(0008,1030)	Study Description	(0032,1060)	Requested Procedure Description
AMWL, UMWL	(0018,1030)	Protocol Name	(0032,1060)	Requested Procedure Description
RS	(0040,0275)	Request Attributes Sequence		
AMWL	>(0040,1001)	Requested Procedure ID	(0040,1001)	Requested Procedure ID
AMWL	>(0032,1060)	Requested Procedure Description	(0032,1060)	Requested Procedure Description
AMWL	>(0040,0009)	Scheduled Procedure Step ID	(0040,0100)>(0040,0009)	Scheduled Procedure Step Sequence>Scheduled Procedure Step ID or Requested Procedure ID
AMWL	>(0040,0007)	Scheduled Procedure Step Description	(0040,0100)>(0040,0007)	Scheduled Procedure Step Sequence>Scheduled Procedure Step Description
AMWL	>(0040,0008)	Scheduled Protocol Code Sequence	(0040,0100)>(0040,0008)	Scheduled Procedure Step Sequence>Scheduled Protocol Code Sequence
AMWL	>>(0008,0100)	Code Value	>>(0008,0100)	Code Value
AMWL	>>(0008,0102)	Coding Scheme Designator	>>(0008,0102)	Coding Scheme Designator
AMWL	>>(0008,0103)	Coding Scheme Version	>>(0008,0103)	Coding Scheme Version
AMWL	>>(0008,0104)	Code Meaning	>>(0008,0104)	Code Meaning
RS	(0008,1032)	Procedure Code Sequence	(0032,1064)	Requested Procedure Code Sequence
AMWL	>(0008,0100)	Code Value	>(0008,0100)	Code Value
AMWL	>(0008,0102)	Coding Scheme Designator	>(0008,0102)	Coding Scheme Designator
AMWL	>(0008,0103)	Coding Scheme Version	>(0008,0103)	Coding Scheme Version
AMWL	>(0008,0104)	Code Meaning	>(0008,0104)	Code Meaning
AMWL, UMWL	(0038,0010)	Admission ID	(0038,0010)	Admission ID
A, UMWL	(0038,0500)	Patient State	(0038,0500)	Patient State
A, U, AMWL, UMWL	(0020,0010)	Study ID	(0040,1001)	Requested Procedure ID

A – attribute value will be added by operator. If not exist – will create.
AMWL – attribute value will be added from MWL. If not exist – will create.
U – attribute value will be updated by operator.
UMWL – attribute value will be updated by from MWL.
RS – sequence attribute will be replaced from MWL.

Invalid attributes will bet set as empty values and will not be added (if not required), replaced or updated.
Valid sequences will be fully replaced.

8.3 Attributes subject to anonymization

SendToPACS allows to anonymize DICOM standard attributes (non-private). Anonymization will be marked in GUI by pressing checkbox “Anonymize” and will fill form with random data:

Table 48. GUI generated attributes

Instance IOD		Value
(0008,0050)	Accession Number	If value is not empty – set Random numbers.
(0010,0010)	Patient's Name	Anonymized^<Random word>
(0010,0020)	Patient ID	MD<Random numbers>
(0010,0030)	Patient's Birth Date	Random years
(0020,0010)	Study ID	If value is not empty – set Random numbers.

Operator can change to different values to be replaced in SOP instance before sending to Storage SCP.
Operator can select different Specific Character Set (0008,0005) to be changed.

8.3.1 Attribute to anonymize

Attributes to be updated or removed:

Table 49. Anonymize attributes

Instance IOD		Value
(0002,0003)	Media Storage SOP Instance UID	Auto
(0002,0012)	Implementation Class UID	1.3.6.1.4.1.44316.3
(0002,0013)	Implementation Version Name	MDSENDTOPACS
(0002,0100)	Private Information Creator UID	Empty
(0002,0102)	Private Information	Empty
(0004,1511)	Referenced SOP Instance UID In File	Empty
(0008,0005)	Specific Character Set	Operator
(0008,0018)	SOP Instance UID	Auto
(0008,0020)	Study Date	Operator
(0008,0030)	Study Time	Operator
(0008,0050)	Accession Number	Operator
(0008,0070)	Manufacturer	Empty
(0008,0080)	Institution Name	Empty
(0008,0081)	Institution Address	Empty
(0008,0082)	Institution Code Sequence	Remove
(0008,0090)	Referring Physician Name	Empty
(0008,0092)	Referring Physician Address	Empty
(0008,0094)	Referring Physician Telephone Numbers	Empty
(0008,0096)	Referring Physician Identification Sequence	Remove
(0008,0116)	Coding Scheme Responsible Organization	Empty
(0008,1010)	Station Name	Empty
(0008,1030)	Study Description	Operator
(0008,1040)	Institutional Department Name	Empty
(0008,1048)	Physicians Of Record	Empty
(0008,1049)	Physicians Of Record Identification Sequence	Remove
(0008,1050)	Performing Physician Name	Empty
(0008,1052)	Performing Physician Identification Sequence	Remove
(0008,1060)	Name Of Physicians Reading Study	Empty
(0008,1062)	Physicians Reading Study Identification Sequence	Remove
(0008,1070)	Operators Name	Empty
(0008,1072)	Operator Identification Sequence	Remove
(0008,1090)	Manufacturer Model Name	Empty
(0008,1155)	Referenced SOP Instance UID	Empty
(0010,0010)	Patient Name	Operator

(0010,0020)	Patient ID	Operator
(0010,0021)	Issuer Of Patient ID	Empty
(0010,0022)	Type Of Patient ID	Empty
(0010,0030)	Patient Birth Date	Operator
(0010,0032)	Patient Birth Time	Empty
(0010,0040)	Patient's Sex	Operator
(0010,0050)	Patient Insurance Plan Code Sequence	Remove
(0010,0101)	Patient Primary Language Code Sequence	Remove
(0010,0102)	Patient Primary Language Modifier Code Sequence	Remove
(0010,1000)	Other Patient I Ds	Empty
(0010,1001)	Other Patient Names	Empty
(0010,1002)	Other Patient I Ds Sequence	remove
(0010,1005)	Patient Birth Name	Empty
(0010,1040)	Patient Address	Empty
(0010,1050)	Insurance Plan Identification	Empty
(0010,1060)	Patient Mother Birth Name	Empty
(0010,1080)	Military Rank	Empty
(0010,1081)	Branch Of Service	Empty
(0010,1090)	Medical Record Locator	Empty
(0010,2150)	Country Of Residence	Empty
(0010,2152)	Region Of Residence	Empty
(0010,2154)	Patient Telephone Numbers	Empty
(0010,2160)	Ethnic Group	Empty
(0010,2180)	Occupation	Empty
(0010,21B0)	Additional Patient History	Empty
(0010,21C0)	Pregnancy Status	Empty
(0010,21D0)	Last Menstrual Date	Empty
(0010,21F0)	Patient Religious Preference	remove
(0010,2202)	Patient Species Code Sequence	remove
(0010,2203)	Patient Sex Neutered	Empty
(0010,2293)	Patient Breed Code Sequence	Remove
(0010,2294)	Breed Registration Sequence	Remove
(0010,2295)	Breed Registration Number	Empty
(0010,2296)	Breed Registry Code Sequence	Remove
(0010,2297)	Responsible Person	Empty
(0010,2298)	Responsible Person Role	Empty
(0010,2299)	Responsible Organization	Empty
(0018,1000)	Device Serial Number	Empty
(0018,1016)	Secondary Capture Device Manufacturer	Empty
(0018,1017)	Hardcopy Device Manufacturer	Empty

(0018,1018)	Secondary Capture Device Manufacturer Model Name	Empty
(0018,1019)	Secondary Capture Device Software Versions	Empty
(0018,101A)	Hardcopy Device Software Version	Empty
(0018,101B)	Hardcopy Device Manufacturer Model Name	Empty
(0018,1020)	Software Versions	Empty
(0018,1200)	Date Of Last Calibration	Empty
(0018,1201)	Time Of Last Calibration	Empty
(0018,700C)	Date Of Last Detector Calibration	Empty
(0018,700E)	Time Of Last Detector Calibration	Empty
(0018,7010)	Exposures On Detector Since Last Calibration	Empty
(0018,7011)	Exposures On Detector Since Manufactured	Empty
(0020,000D)	Study Instance UID	Auto
(0020,000E)	Series Instance UID	Auto
(0020,0010)	Study ID	Operator
(0032,000A)	Study Status ID	Empty
(0032,000C)	Study Priority ID	Empty
(0032,0012)	Study ID Issuer	Empty
(0032,0032)	Study Verified Date	Empty
(0032,0033)	Study Verified Time	Empty
(0032,0034)	Study Read Date	Empty
(0032,0035)	Study Read Time	Empty
(0032,1000)	Scheduled Study Start Date	Empty
(0032,1001)	Scheduled Study Start Time	Empty
(0032,1010)	Scheduled Study Stop Date	Empty
(0032,1011)	Scheduled Study Stop Time	Empty
(0032,1020)	Scheduled Study Location	Empty
(0032,1021)	Scheduled Study Location AE Title	Empty
(0032,1030)	Reason For Study	Empty
(0032,1031)	Requesting Physician Identification Sequence	Remove
(0032,1032)	Requesting Physician	Empty
(0032,1033)	Requesting Service	Empty
(0032,1040)	Study Arrival Date	Empty
(0032,1041)	Study Arrival Time	Empty
(0032,1050)	Study Completion Date	Empty
(0032,1051)	Study Completion Time	Empty
(0032,1055)	Study Component Status ID	Empty
(0032,1060)	Requested Procedure Description	Empty
(0032,1064)	Requested Procedure Code Sequence	Remove
(0032,1070)	Requested Contrast Agent	Empty
(0032,4000)	Study Comments	Empty

(0038,0010)	Admission ID	Empty
(0038,0011)	Issuer Of Admission ID	Empty
(0038,0016)	Route Of Admissions	Empty
(0038,001A)	Scheduled Admission Date	Empty
(0038,001B)	Scheduled Admission Time	Empty
(0038,001C)	Scheduled Discharge Date	Empty
(0038,001D)	Scheduled Discharge Time	Empty
(0038,001E)	Scheduled Patient Institution Residence	Empty
(0038,0020)	Admitting Date	Empty
(0038,0021)	Admitting Time	Empty
(0038,0030)	Discharge Date	Empty
(0038,0032)	Discharge Time	Empty
(0038,0040)	Discharge Diagnosis Description	Empty
(0038,0044)	Discharge Diagnosis Code Sequence	Remove
(0038,0300)	Current Patient Location	Empty
(0038,0400)	Patient Institution Residence	Empty
(0038,0500)	Patient State	Empty
(0040,0001)	Scheduled Station AE Title	Empty
(0040,0006)	Scheduled Performing Physician Name	Empty
(0040,000B)	Scheduled Performing Physician Identification Sequence	Remove
(0040,0010)	Scheduled Station Name	Empty
(0040,0011)	Scheduled Procedure Step Location	Empty
(0040,0012)	Pre Medication	Empty
(0040,0241)	Performed Station AE Title	Empty
(0040,0242)	Performed Station Name	Empty
(0040,0243)	Performed Location	Empty
(0040,0296)	Billing Item Sequence	Remove
(0040,2008)	Order Entered By	Empty
(0040,2009)	Order Enterer Location	Empty
(0040,2010)	Order Callback Phone Number	Empty
(4008,0042)	Results ID Issuer	Empty
(4008,010C)	Interpretation Author	Empty
(4008,0114)	Physician Approving Interpretation	Empty
(4008,0119)	Distribution Name	Empty
(4008,011A)	Distribution Address	Empty
(4008,0202)	Interpretation ID Issuer	Empty

Operator – attribute value will be updated by operator. If attribute do not exist – will create.
Remove – remove attribute.
Empty – clear attribute value.
Auto – attribute value will be generate.

8.3 Data Dictionary of Private Attributes

SendToPACS does not define any private attributes. User can set private attribute via general settings “Additional Info tag”. Tag VR will be LT.

8.4 Coded Terminology and Templates

SendToPACS does not use any custom coded terminology.

8.5 Greyscale Image Consistency

Not applicable.

8.6 Standard Extended / Specialized/ Private SOP Classes

SendToPACS does not use any standard extensions.

8.7 Private Transfer Syntaxes

No Private Transfer Syntax is supported.